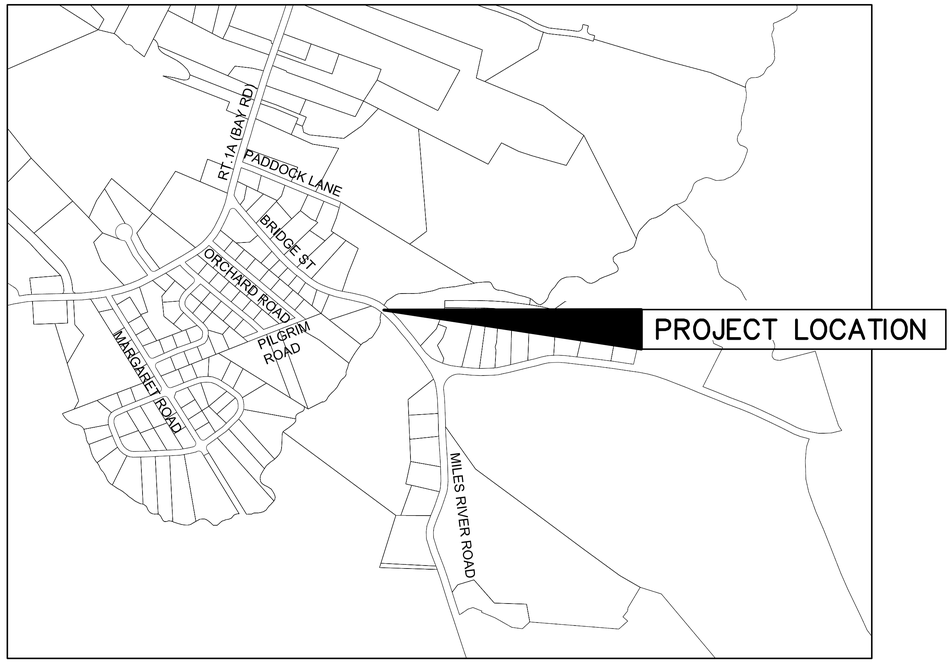

LOCATION PLAN
SCALE: 1"=500'

SHEET INDEX

SHEET NO.	DESCRIPTION
1	TITLE SHEET AND INDEX
2	GENERAL NOTES (GN-1)
3	EXISTING CONDITIONS PLAN (EX-1)
4	BORING LOGS (BL-1)
5	CONSTRUCTION PLAN (C-1)
6	CULVERT STRUCTURAL PLAN (S-1)
7	CULVERT ELEVATIONS AND SECTIONS (S-2)
8	CULVERT SECTIONS AND DETAILS (S-3)
9-11	CONSTRUCTION DETAILS (CD-1, CD-2, CD-3)
12	CONSTRUCTION ZONE SAFETY PLAN (CD-4)

COMMONWEALTH OF MASSACHUSETTS
RICHARD A. CAMPBELL
STRUCTURAL
No. 36256
REGISTERED PROFESSIONAL ENGINEER

4/26/2016

TOWN OF HAMILTON MASSACHUSETTS

DEPARTMENT OF PUBLIC WORKS

BRIDGE STREET CULVERT REPLACEMENT PROJECT BRIDGE NO. H-03-008(BQ2)

APRIL 26, 2016

CONSTRUCTION DOCUMENTS

Weston&Sampson®
Five Centennial Drive, Peabody, Massachusetts 01960-7985

File No. 212-12

COPYRIGHT 2015 WESTON & SAMPSON

GENERAL NOTES

1. TOPOGRAPHICAL INFORMATION BASED ON AN ON THE GROUND SURVEY PERFORMED BY WESTON & SAMPSON, INC. IN JUNE 2012.
2. THE LOCATIONS OF EXISTING UNDERGROUND UTILITIES ARE SHOWN IN AN APPROXIMATE WAY ONLY AND HAVE NOT BEEN INDEPENDENTLY VERIFIED BY THE OWNER OR ITS REPRESENTATIVE. THE CONTRACTOR SHALL DETERMINE THE EXACT LOCATION OF ALL EXISTING UTILITIES BEFORE COMMENCING WORK, AND AGREES TO BE FULLY RESPONSIBLE FOR ANY AND ALL DAMAGES WHICH MIGHT BE OCCASIONED BY THE CONTRACTOR'S FAILURE TO EXACTLY LOCATE AND PRESERVE ANY AND ALL UNDERGROUND UTILITIES. THE CONTRACTOR SHALL DIG TEST PITS WITH THE LOCATIONS BEING APPROVED BY THE ENGINEER PRIOR TO COMMENCEMENT OF WORK TO EXACTLY LOCATE EXISTING UTILIITES.
3. WHERE AN EXISTING UTILITY IS FOUND TO CONFLICT WITH THE PROPOSED WORK, THE LOCATION, ELEVATION AND SIZE OF THE UTILITY SHALL BE ACCURATELY DETERMINED WITHOUT DELAY BY THE CONTRACTOR AND THE INFORMATION FURNISHED TO THE ENGINEER FOR RESOLUTION OF THE CONFLICT.
4. THE CONTRACTOR SHALL MAKE ALL ARRANGEMENTS FOR THE ALTERATION AND ADJUSTMENT OF GAS, ELECTRIC, TELEPHONE AND ANY OTHER PRIVATE UTILITIES BY THE UTILITY OWNER. ANY ALTERATIONS SHALL BE INCIDENTAL TO THE PROJECT. THE CONTRACTOR IS RESPONSIBLE FOR THE TEMPORARY SUPPORT OF ALL UTILITIES TO REMAIN IN PLACE AND SHALL DESCRIBE IN WRITING, TO THE SATISFACTION OF THE ENGINEER, HIS METHOD OF TEMPORARY SUPPORT.
5. AREAS OUTSIDE THE LIMITS OF PROPOSED WORK DISTURBED BY THE CONTRACTOR'S OPERATIONS SHALL BE RESTORED BY THE CONTRACTOR TO THEIR ORIGINAL CONDITION AT THE CONTRACTOR'S EXPENSE.
6. THE TERM "PROPOSED (PROP)" INDICATES WORK TO BE CONSTRUCTED USING NEW MATERIALS OR, WHERE APPLICABLE, RE-USING EXISTING MATERIALS IDENTIFIED AS "REMOVE AND RESET (R&R)".
7. ALL EXISTING STATE, COUNTY AND TOWN LOCATION LINES AND PRIVATE PROPERTY LINES HAVE BEEN ESTABLISHED FROM AVAILABLE INFORMATION AND THEIR EXACT LOCATION ARE NOT GUARANTEED.
8. ALL EXCESS MATERIAL FROM ROADWAY RECONSTRUCTION OR THE EXCAVATION PROCESS SHALL BE REUSED ON SITE OR REMOVED FROM THE SITE AND DISPOSED OF IN A LEGAL AND PROPER MANNER.
9. THE CONTRACTOR SHALL CALL **DIGSAFE AT 1-888-344-7233** AT LEAST 72 HOURS, SATURDAYS, AND HOLIDAYS EXCLUDED, PRIOR TO EXCAVATING AT ANY LOCATION. A COPY OF THE DIGSAFE PROJECT REFERENCE NUMBER(S) SHALL BE GIVEN TO THE TOWN PRIOR TO EXCAVATION.
10. IT IS THE RESPONSIBILITY OF THE CONTRACTOR TO HIRE A PROFESSIONAL LAND SURVEYOR REGISTERED IN THE COMMONWEALTH OF MASSACHUSETTS FOR ALL LAYOUT WORK INCLUDING BASELINE LAYOUT. LAYOUT SHALL INCLUDE ALL PROPOSED WORK AS SHOWN IN THE CONTRACT DOCUMENTS, OR AS REQUIRED BY THE ENGINEER OR TOWN. ONCE LAID OUT, ALL PROPOSED WORK SHALL BE DEEMED ACCEPTABLE BY THE ENGINEER OR TOWN PRIOR TO ANY COMMENCEMENT OF WORK. ANY AND ALL WORK RELATED TO THE CONSTRUCTION LAYOUT SHALL BE INCIDENTAL TO THE PROJECT.
11. JOINTS BETWEEN HOT MIX ASPHALT TRENCH PAVEMENT AND SAWCUT EXISTING PAVEMENT SHALL BE SEALED WITH BITUMEN AND BACKSANDED.
12. IF DEEMED NECESSARY DUE TO THE WORK, THE CONTRACTOR SHALL COORDINATE WITH THE TOWN OF HAMILTON DEPARTMENT OF PUBLIC WORKS, THE HAMILTON FIRE DEPARTMENT, AND THE ENGINEER FOR APPROVAL OF SHUTTING DOWN ANY EXISTING WATER MAINS AND SHALL ALSO OBTAIN APPROVAL FOR DISRUPTING ANY EXISTING SEWER FLOWS.
13. THE CONTRACTOR SHALL BE AWARE THAT ONLY TOWN PERSONNEL ARE ALLOWED TO OPERATE WATER GATES. ANY REQUESTS TO OPERATE THE GATES SHALL BE COORDINATED THROUGH THE ENGINEER.
14. THE EXISTING GAS MAIN LOCATIONS ARE SHOWN IN AN APPROXIMATE LOCATION. THE CONTRACTOR IS RESPONSIBLE FOR CONTACTING THE GAS COMPANIES PRIOR TO COMMENCEMENT OF ANY WORK AND CONFIRMING SIZES, TYPES OF GAS LINES, AND EXACT LOCATIONS OR CHANGE OF PIPE TYPE. ALL COORDINATION AND ARRANGEMENTS WITH THE UTILITY COMPANIES SHALL BE INCIDENTAL TO THE PROJECT. ANY DELAY IN WORK DUE TO CONFLICTS WITH THE PROPOSED WORK AND ACTUAL LOCATION OF EXISTING GAS MAINS SHALL BE INCIDENTAL TO THE PROJECT.
15. THE CONTRACTOR SHALL INSTALL PRIOR TO COMMENCEMENT OF WORK, MAINTAIN, AND REMOVE AT THE END OF THE PROJECT INLET SEDIMENT CONTROL BAGS IN ALL CATCH BASINS, WITHIN OR ADJACENT TO THE PROJECT LIMITS. THE CONTRACTOR SHALL ALSO MAINTAIN SILT FENCE AND COMPOST FILTER TUBES AS SHOWN ON THE PLANS THROUGHOUT THE DURATION OF THE PROJECT AND REMOVE AT THE END.
16. ANY GRASS AREAS DISTURBED BY THE WORK SHALL BE RESTORED WITH LOAM AND SEED.
17. ANY LANDSCAPED AREAS DISTURBED BY THE WORK SHALL BE RESTORED TO EXISTING CONDITIONS WITH EXISTING OR NEW GROUND COVER MATERIALS AS REQUIRED BY THE ENGINEER. ANY PLANTS, SHRUBS, OR FLOWERS DISTURBED BY THE WORK SHALL BE RESET TO EXISTING CONDITIONS OR REPLACED WITH NEW PLANTS, SHRUBS, OR FLOWERS AS REQUIRED BY THE ENGINEER. ALL WORK TO RESTORE LANDSCAPE AREAS, NEW GROUND COVER MATERIALS, NEW PLANTS, NEW SHRUBS, OR NEW FLOWERS REQUIRED BY THE ENGINEER SHALL BE INCIDENTAL TO THE PROJECT.
18. CONTRACTOR TO COORDINATE WITH UTILITY POLE OWNERS IN AREAS WHERE UNDERGROUND UTILITY WORK IS WITHIN CLOSE PROXIMITY AND POSSIBLE UTILITY POLE SHORING IS REQUIRED WHILE INSTALLING PROPOSED UTILITIES.
19. RAISE AND ADJUST FRAMES AND GRATES, FRAMES AND COVERS AND GATE BOXES PRIOR TO PAVEMENT OVERLAY.
20. CONTRACTOR SHALL MAINTAIN ONE LANE OF TRAFFIC ON BRIDGE STREET AT ALL TIMES UNLESS OTHERWISE APPROVED BY THE TOWN OF HAMILTON.
21. HORIZONTAL DATUM IS THE MASSACHUSETTS STATE PLANE COORDINATE SYSTEM.
22. ELEVATIONS ARE BASED ON THE NATIONAL GEODETIC VERTICAL DATUM (NGVD) 1983.
23. TOWN RESERVES THE RIGHT TO SALVAGE ANY OF THE GRANITE BLOCK MATERIALS THAT MAKE UP THE EXISTING CULVERT . AT THE TOWN'S REQUEST THE BLOCKS SHALL BE DELIVERED TO THE DPW YARD DURING THE DEMOLITION OF THE EXISTING CULVERT.
24. CONTRACTOR'S WORK INCLUDES INSTALLATION OF BYPASS PIPING AND PROVIDING EMERGENCY BYPASS PUMPS CAPABLE OF HANDLING RIVER FLOW PER SECTION 01535.

SUGGESTED CONSTRUCTION SEQUENCING FOR CULVERT REPLACEMENT

THE FOLLOWING IS A SUGGESTED CONSTRUCTION SEQUENCE THAT THE CONTRACTOR MAY CHOOSE TO ADOPT WHEN INSTALLING THE CULVERT. THE CONTRACTOR, HOWEVER, HAS THE OPTION OF SUBMITTING AN ALTERNATIVE CONSTRUCTION SEQUENCE TO SATISFY THE PROJECT REQUIRMENTS. THE SUGGESTED CONSTRUCTION SEQUENCE IS OUTLINED AS FOLLOWS:

1. REFER TO NOTICE-OF-INTENT SUBMISSION AND ORDER OF CONDITIONS ISSUED BY THE HAMILTON CONSERVATION COMMISSION, WATER QUALITY CERTIFICATION, U.S. ARMY CORPS OF ENGINEERS, AND OTHER PERMITS AND MAKE ALL PROVISIONS REQUIRED THEREIN.
2. INSTALL WATER LEVEL GAUGES ON BOTH SIDES OF CULVERT AT LEAST 10 DAYS PRIOR TO COFFERDAM INSTALLATION. MONITOR THE LEVEL GAUGES DAILY FROM THAT POINT UNTIL 10 DAYS AFTER COMPLETION OF THE PROJECT.
3. INSTALL EROSION/SEDIMENTATION CONTROL DEVICES AS SPECIFIED.
4. INSTALL ALL CONSTRUCTION ZONE SAFETY SIGNING AND CHANNELIZATION DEVICES.
5. PROVIDE DEWATERING PUMP(S) OF SUFFICIENT CAPACITY TO INTERCEPT GROUND WATER INFILTRATION AND ANY PORTION OF THE STREAM FLOW BYPASSING THE SANDBAGS.
6. INSTALL BYPASS SYSTEM, INCLUDING 2-24 INCH BYPASS PIPES.
7. OBSTRUCT RIVER FLOW FROM THE WORK AREA BY PLACING SAND BAGS AND JERSEY BARRIERS OR APPROVED COFFERDAM SYSTEM AT THE INLET AND OUTLET OF THE PROPOSED CONTROL STRUCTURE.
8. INSTALL HAY BALES AND FILTER FABRIC DEWATERING DISCHARGE LOCATION FOR THE PURPOSE OF FILTERING FINES PUMPED FROM THE DEWATERING PUMP(S) (SEE DETAILS).
9. DIVERSION FLOW FROM PUMPS TO THE SEDIMENTATION TANK SHALL BE RELEASED UPSTREAM OF THE HAYBALES.
10. THE CONTRACTOR SHALL BE RESPONSIBLE FOR MAINTAINING THE STREAM FLOW DIVERSION SYSTEM UNTIL THE BRIDGE IS REMOVED AND THE CULVERT INSTALLED.
11. EXCAVATE THE AREA AS NECESSARY FOR REMOVAL OF EXISTING BRIDGE. PROVIDE TEMPORARY SUPPORT FOR EXISTING UTILITIES, AS REQUIRED.
12. STOCKPILE SUITABLE EXCAVATED MATERIAL AT AN OFF-SITE LOCATION FOR LATER USE AS BACKFILL. DISPOSE OF UNSUITABLE MATERIALS. HAYBALES AND SILT FENCE SHALL SURROUND STOCKPILED SOILS IN THE 100-FT WETLAND BUFFER ZONE.
13. REMOVE EXISTING BRIDGE STRUCTURE AND DISPOSE OF PROPERLY.
14. PREPARE SUBGRADE, INSTALL CRUSHED STONE BEDDING FOR THE PROPOSED PRECAST CONCRETE BOX CULVERT.
15. INSTALL THE CONCRETE BOX CULVERTS AND WINGWALLS AT THE LOCATION AND ELEVATIONS AS SHOWN ON THE PLANS.
16. RESTORE STREAM BED AND EMBANKMENTS WITH RIP RAP/STONE, AND STOCKPILED EXCAVATED MATERIAL, AS REQUIRED.
17. REMOVE SANDBAGS/COFFERDAM OBSTRUCTING FLOW THROUGH THE PRECAST CONCRETE BOX CULVERT.
18. REMOVE BYPASS SYSTEM.
19. RESTORE STREAM BED, BANK AND BORDERING VEGETATED WETLANDS TO GRADE WITH STOCKPILED EXCAVATED MATERIAL AND RIP RAP AS INDICATED.
20. REMOVE ANY REMAINING SANDBAGS AND/OR COFFERDAM SYSTEM FROM STREAM BED OR ADJACENT LOCATIONS.
21. INSTALL BITUMINOUS CONCRETE PAVEMENT AS SHOWN ON THE PLANS.
22. INSTALL GUARD RAILS.
23. REMOVE EROSION/SEDIMENTATION CONTROL DEVICES.
24. REMOVE WATER LEVEL GAUGES 10 DAYS AFTER COMPLETION OF CULVERT.

ABBREVIATIONS:

B-3	BORING NUMBER
LT.	LEFT
RT.	RIGHT
STA.	STATION (SURVEY BASELINE)
EXP.	DENOTES EXPANSION BEARING
CL., CLR.	CLEAR CONCRETE COVER
℄	CENTERLINE
N.	NORTH
S.	SOUTH
BL	BASELINE
ABUT.	ABUTMENT
YR.	YEAR
MIN.	MINIMUM
DIA.	DIAMETER
APPROX.	APPROXIMATE
TYP.	TYPICAL
HWY.	HIGHWAY
BRG.	BEARING
EL., ELEV.	ELEVATION
JT.	JOINT
CONST.	CONSTRUCTION
CEM., CEMENT.	CEMENTITIOUS
RTE.	ROUTE
DIAPH.	DIAPHRAGM
EQ.	EQUAL, EQUALLY
SP.	SPACING, SPACED
S.F.M.	SILICA FUME MODIFIED
GV	GAS VALVE & BOX
WV	WATER VALVE & BOX
TES	TERMINAL END SECTION
REM	REMOVE
PROT	PROTECT

COPYRIGHT 2015 WESTON & SAMPSON

Weston&Sampson®
Five Centennial Drive, Peabody, MA 01960
(978) 532-1900 (800) SAMPSON
www.westonandsampson.com

No.	Date	Dr.By	Ck.By	App.By	Description

APPROVED

REGISTERED PROFESSIONAL ENGINEER

4.26.16
DATE

COMMONWEALTH OF MASSACHUSETTS
KENT M. NICHOLS
CIVIL
No. 47273
REGISTERED PROFESSIONAL ENGINEER

TOWN OF HAMILTON, MASSACHUSETTS
DEPARTMENT OF PUBLIC WORKS

BRIDGE STREET CULVERT REPLACEMENT PROJECT

GENERAL NOTES

CADD NO.	SCALE:	CONTRACT:	JOB NO.	DR.BY	DSN.BY	CHK.BY	APP.BY
GN-1	AS NOTED	NA	2140085	NAP	MK	LFK	MK

GN-1

FILE NO. 212-11

Z:\MA-Foxboro-Projects\Hamilton MA\Bridge Street Culvert\CADart\Plan Set\02_General Notes and Legend.dwg

CONTROL POINT 1
N: 3050382.5599
E: 830595.8368

PROPERTY BOUND
N: 3050391.6577
E: 830610.6240
ELEVATION: 28.35'

CONTROL POINT 2
N: 3050337.8629
E: 830665.7262

BENCHMARK
PK NAIL NO. 1
IN SIDEWALK
EL.=32.23

BENCHMARK
PK NAIL NO. 2
IN SIDEWALK
EL.=31.83

BRIDGE ST

MILES RIVER

EXISTING HEADWALL

MAP #57 LOT #15 #53 BRIDGE STREET

MAP #57 LOT #14 #49 BRIDGE STREET

MAP #57 LOT #13 #93 BRIDGE STREET

MAP #57 LOT #127 #58 BRIDGE STREET

MAP #57 LOT #1 #76 BRIDGE STREET

WF-11, WF-10, WF-9, WF-8, WF-7, WF-6, WF-5, WF-4, WF-3, WF-2, WF-1

WF-10A, WF-9A, WF-8A, WF-7A, WF-6A, WF-5A, WF-4A, WF-3A, WF-2A, WF-1A

B-1, B-2

UTILITY POLE (TYP)

20" OAK, 15" OAK, 12" OAK, 36" OAK, 18" OAK, 12" PINE, 18" PINE, 20" PINE, 30" PINE, 12" CEDAR

BIT. SIDEWALK, WOOD GUARDRAIL, GRAN. CURB, STEEL GUARDRAIL

ELEC. OHW, WOOD FENCE, APPROX. UTILITY EASEMENT

4"G STEEL NSTAR 12"W

8"G/12.75" SLEEVE KINDER MORGAN

4"G PE, 4"D PE, 12"W

10" STEEL SLEEVE, 12.75" STEEL SLEEVE

EXISTING WINGWALL

HMA WALK

7'(ARCH)X7' BOX CULVERT

EDGE OF ROAD, EDGE OF WATER

BIT. CURB

0+00, 1+00, 1+18

UNK, UNK 3

SCALE IN FEET
0 10 20 30

COPYRIGHT 2015 WESTON & SAMPSON

N

Weston&Sampson®
Five Centennial Drive, Peabody, MA 01960
(978) 532-1900 (800) SAMPSON
www.westonandsampson.com

No.	Date	Description	Dr.By	Ch.By	App.By
		APPROVED			

4-26-16
DATE

REGISTERED PROFESSIONAL ENGINEER

COMMONWEALTH OF MASSACHUSETTS
MICHAEL KOSTANSKI
CIVIL
No. 47523
REGISTERED PROFESSIONAL ENGINEER

TOWN OF HAMILTON, MASSACHUSETTS
DEPARTMENT OF PUBLIC WORKS

BRIDGE STREET CULVERT REPLACEMENT PROJECT

EXISTING CONDITIONS PLAN

CADD NO.	SCALE:	CONTRACT:	JOB NO.	DR.BY	DSN.BY	CHK.BY	APP.BY
EX-1	AS NOTED	NA	2140085	NAP	MK	LFK	MK

EX-1

FILE NO. 212-10

Weston & Sampson
ENGINEERS, INC.

PROJECT: Bridge Street Culvert Evaluation, Hamilton, MA

REPORT OF BORING No. B-1
SHEET 1 OF 1
Project No. 2100047
CHKD BY Ben Green

BORING Co. Geologic Earth Exploration, Inc.
FOREMAN Dave Shelden & Glen Peterson
WSE GEOLOGIST: Tim DeGuglielmo
BORING LOCATION Bridge Street Culvert, Hamilton, MA
GROUND SURFACE ELEV. DATUM
DATE START 3/17/2010 DATE END 3/17/2010

SAMPLER: SAMPLER CONSISTS OF 24" by 1 3/8" I.D. SPLIT SPOON DRIVEN USING A 140 lb. HAMMER FALLING 30 in. (WINCH DRIVEN DONUT HAMMER)
CASING: 3.25 in. INSIDE DIAMETER HOLLOW STEM AUGERS
CASING SIZE: 3.25 inch H.S.A OTHER:

GROUNDWATER READINGS

DATE	TIME	WATER AT	CASING AT	STABILIZATION TIME
3/17/2010		6' +/-		

DEPTH (feet)	CASING (lb/ft)	SAMPLE No.	PEN/REC (in)	DEPTH (ft)	BLOWS/6"	PID (ppm)	SAMPLE DESCRIPTION Burmister Classification	NOTES	STRATUM DESCRIPTION
	H.S.A.	S-1	24/9	0-2	9-14-17-9	N/A	Dense, black, coarse to fine SAND, some coarse to fine gravel, trace silt		2" asphalt sidewalk
									FILL
5		S-2	24/7	5-7	3-12-10-4	N/A	Medium dense, tan, coarse to fine, gravely, coarse to fine SAND, some silt		6 ft.+/- Water
									COARSE TO FINE SAND
10		S-3	24/9	10-12	4-4-3-4	N/A	Loose, tan/brown, silty, coarse to fine SAND, little fine gravel		
15		S-4	18/17	15-16.5	16-58-115/6"	N/A	(top 12") Very dense, tan/brown, coarse to medium SAND, trace silt. (bottom 6") tan/brown, coarse to fine SAND, some fine gravel, little silt		**GRAVELY SAND**
20								1	
								2	20 ft. - End of Boring
25									
30									

GRANULAR SOILS		COHESIVE SOILS	
BLOWS/FT	DENSITY	BLOWS/FT	DENSITY
0-4	V. LOOSE	0-2	V. SOFT
4-10	LOOSE	2-4	SOFT
10-30	M. DENSE	4-8	M. STIFF
30-50	DENSE	8-15	STIFF
> 50	V. DENSE	15-30	V. STIFF
		> 30	HARD

NOTES:
1) At 20' +/- drill rods became locked inside HSA due to soil heave. Could not remove, hole abandoned.
2) Boring backfilled with cuttings and patched at grade.

NOTES:
1) THE STRATIFICATION LINES REPRESENT THE APPROXIMATE BOUNDARY BETWEEN SOIL TYPES. TRANSITIONS MAY BE GRADUAL.
2) WATER LEVEL READINGS HAVE BEEN MADE IN THE DRILL HOLES AT TIMES AND UNDER CONDITIONS STATED ON THIS BORING LOG. FLUCTUATIONS IN THE LEVEL OF GROUNDWATER MAY OCCUR DUE TO OTHER FACTORS THAN THOSE PRESENT AT THE TIME MEASUREMENTS ARE MADE.

BORING No. B-1

O:\Hamilton, MA\2100047 - Bridge Street Culvert Replacement\Borings\Original - Do Not Touch\[Boring Logs_031710.xls]B-2

Weston & Sampson
ENGINEERS, INC.

PROJECT: Bridge Street Culvert Evaluation, Hamilton, MA

REPORT OF BORING No. B-2
SHEET 1 OF 1
Project No. 2100047
CHKD BY Ben Green

BORING Co. Geologic Earth Exploration, Inc.
FOREMAN Dave Shelden & Glen Peterson
WSE GEOLOGIST: Tim DeGuglielmo
BORING LOCATION Bridge Street Culvert, Hamilton, MA
GROUND SURFACE ELEV. DATUM
DATE START 3/17/2010 DATE END 3/17/2010

SAMPLER: SAMPLER CONSISTS OF 24" by 1 3/8" I.D. SPLIT SPOON DRIVEN USING A 140 lb. HAMMER FALLING 30 in. (WINCH DRIVEN DONUT HAMMER)
CASING: 4 in. INSIDE DIAMETER STEEL CASING ADVANCED USING THE DRIVE AND WASH TECHNIQUE
CASING SIZE: 4 IN. INSIDE DIAMETER OTHER:

GROUNDWATER READINGS

DATE	TIME	WATER AT	CASING AT	STABILIZATION TIME
3/17/2010		5' +/-		

DEPTH (feet)	CASING (lb/ft)	SAMPLE No.	PEN/REC (in)	DEPTH (ft)	BLOWS/6"	PID (ppm)	SAMPLE DESCRIPTION Burmister Classification	NOTES	STRATUM DESCRIPTION
		S-1	24/7	0-2	46-53-55-47	N/A	Very dense, tan/black, coarse to medium SAND, some coarse gravel, little silt.		5 in.+/- Asphalt Pave.
5		S-2	24/0	5-7	75-23-25-14	N/A	No Recovery	1	5 ft.+/- Water
			24/10				Dense, tan/brown, coarse to fine GRAVEL, some coarse to fine sand.		
10		S-3	24/7	10-12	22-13-13-18	N/A	Medium dense, grey, coarse to fine GRAVEL, some medium to fine sand, little silt.		**SANDY GRAVEL**
15		S-4	24/10	15-17	35-39-46-27	N/A	Very dense, brown/grey, medium to fine sandy, coarse to fine GRAVEL, little silt.		
20		S-5	24/10	20-22	60-25-24-34	N/A	Dense, tan/brown, coarse to fine GRAVEL, some medium to fine sand, trace silt.		
25		S-6	24/16	25-27	47-65-70-81/4"	N/A	(top 4") Very dense, white/grey, fine GRAVEL, some medium to fine sand, trace silt	2	
							(bottom 12") Very dense, tan/brown, fine GRAVEL, some medium to fine sand, trace silt.	3	27 ft. - End of Boring
30									

GRANULAR SOILS		COHESIVE SOILS	
BLOWS/FT	DENSITY	BLOWS/FT	DENSITY
0-4	V. LOOSE	0-2	V. SOFT
4-10	LOOSE	2-4	SOFT
10-30	M. DENSE	4-8	M. STIFF
30-50	DENSE	8-15	STIFF
> 50	V. DENSE	15-30	V. STIFF
		> 30	HARD

NOTES:
1) No Recovery with 1-3/8" dia. Sampler. Switched to 3"dia. +/- sampler for sample recovery.
2) 4" drill wash at top of sampler.
3) Boring backfilled with cuttings and patched at grade.

NOTES:
1) THE STRATIFICATION LINES REPRESENT THE APPROXIMATE BOUNDARY BETWEEN SOIL TYPES. TRANSITIONS MAY BE GRADUAL.
2) WATER LEVEL READINGS HAVE BEEN MADE IN THE DRILL HOLES AT TIMES AND UNDER CONDITIONS STATED ON THIS BORING LOG. FLUCTUATIONS IN THE LEVEL OF GROUNDWATER MAY OCCUR DUE TO OTHER FACTORS THAN THOSE PRESENT AT THE TIME MEASUREMENTS ARE MADE.

BORING No. B-2

O:\Hamilton, MA\2100047 - Bridge Street Culvert Replacement\Borings\Original - Do Not Touch\[Boring Logs_031710.xls]B-2

Weston&Sampson®
Five Centennial Drive, Peabody, MA 01960
(978) 532-1900 (800) SAMPSON
www.westonandsampson.com

No. | Date | Description | Dr.By | Ck.By | App.By

4-26-16
DATE

REGISTERED PROFESSIONAL ENGINEER
HERBERT M. NICHOLS JR. No. 47773 COMMONWEALTH OF MASSACHUSETTS REGISTERED PROFESSIONAL ENGINEER

TOWN OF HAMILTON, MASSACHUSETTS
DEPARTMENT OF PUBLIC WORKS
BRIDGE STREET CULVERT REPLACEMENT PROJECT
BORING LOGS

CADD NO. BL_1 | SCALE: AS NOTED | CONTRACT: NA | JOB NO. 2140085 | DR.BY NAP | DSN.BY MK | CHK.BY LFK | APP.BY MK

BL-1

FILE NO. 212-9

SHEET 4 OF 12

COPYRIGHT 2015 WESTON & SAMPSON

Z:\MA-Foxboro-Projects\Hamilton MA\Bridge Street Culvert\CADD\Plan Set\[Boring Logs.dwg

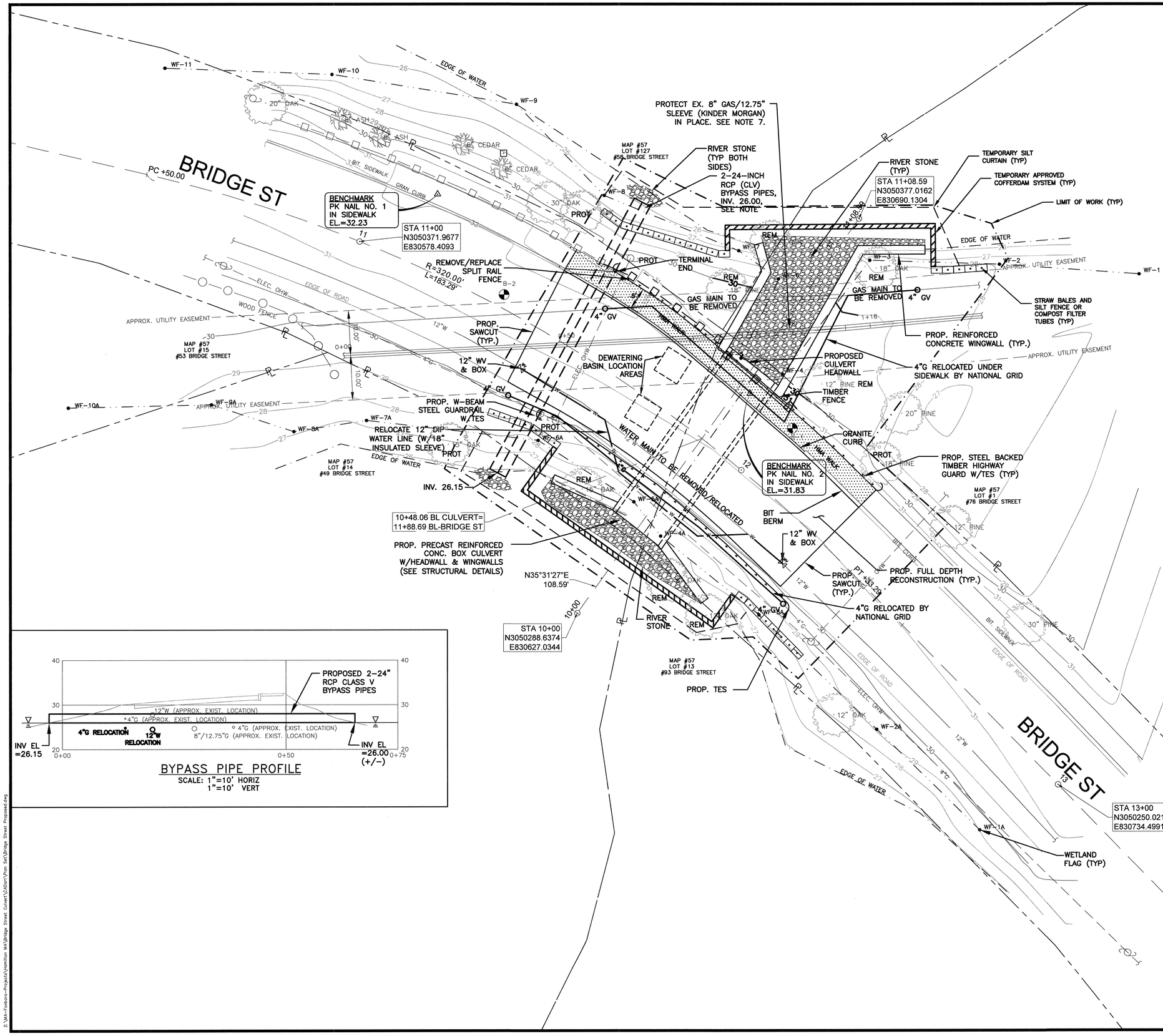

BYPASS PIPE PROFILE

SCALE: 1"=10' HORIZ
1"=10' VERT

NOTES:

1. WETLANDS DELINEATED BY WESTON & SAMPSON, INC., MEL HIGGINS ON APRIL 2, 2014.
2. CONTRACTOR TO SUPPORT AND PROTECT EXISTING KINDER MORGAN (KM) GAS MAIN DURING CONSTRUCTION AND COORDINATE WITH KM.
3. CONTRACTOR SHALL COORDINATE THE RELOCATION OF THE TWO NATIONAL GRID (NG) GAS LINES WITH NG. RELOCATION OF NG GAS LINES SHALL BE CONSTRUCTED BY NG.
4. CONTRACTOR SHALL INSTALL PAVEMENT MARKINGS TO MATCH EXISTING. LANE WIDTHS SHALL BE MAINTAINED.
5. DISTURBED AREAS SHALL BE RESTORED PER THE ORDER OF CONDITIONS, AND AT A MINIMUM AREAS OUTSIDE OF THE WETLAND AREAS SHALL BE GIVEN 6-INCHES OF LOAM AND SEED.
6. 100-YEAR FLOOD ELEVATION IS 30-FEET UPSTREAM OF THE CULVERT AND 27-FEET DOWNSTREAM OF THE CULVERT.
7. CONTRACTOR SHALL CAST WINGWALLS AROUND EXISTING KINDER MORGAN 8"GAS/12.75" SLEEVE AND PROTECT THE EX. GAS LINE IN PLACE DURING CONSTRUCTION.
8. CONTRACTOR SHALL REMOVE 1-24" BYPASS PIPE. 1-24" BYPASS PIPE SHALL BE LEFT IN PLACE AFTER CONSTRUCTION.
9. CONTRACTOR SHALL COORDINATE THE RELOCATION OF THE 12" WATER LINE AND ANY REQUIRED BY-PASS OPERATION WITH THE TOWN OF HAMILTON.
10. CONTRACTOR SHALL ACCURATELY LOCATE ALL RELOCATED UTILITIES FOR FUTURE REFERENCE IN THEIR AS-BUILT HORIZONTAL/VERTICAL CONFIGURATION.
11. CONTRACTOR SHALL PROTECT AND/OR ACCURATELY RELOCATE ALL BENCHMARK INFORMATION TO A SAFE LOCATION OUT OF HARM FROM CONSTRUCTION OPERATION.
12. CONTRACTOR TO INSTALL, MONITOR & MAINTAIN LEVEL GAUGES ON BOTH THE UPSTREAM AND DOWNSTREAM SIDES OF THE CULVERT PRIOR TO COFFERDAM INSTALLATION AND CONTINUE TO 10 DAYS AFTER PROJECT COMPLETION.
13. CONTRACTOR RESPONSIBLE FOR CONTROL OF RIVER FLOW AROUND COFFERDAM. THIS INCLUDES INSTALLATION OF THE BYPASS PIPES AND TEMPORARY BYPASS PUMPING SYSTEM PER SPEC. 01535.
14. CONTRACTOR SHALL KEEP ONE LANE OPEN AT ALL TIMES.
15. WETLAND AREAS SHALL BE RESTORED PER THE CONSERVATION COMMISSION'S ORDER OF CONDITIONS.
16. A SIGN SHALL BE DISPLAYED AT THE SITE NOT LESS THAN TWO SQ. FEET BEARING THE WORDS "MASSDEP FILE NO.172-0578".

COPYRIGHT 2015 WESTON & SAMPSON

Weston&Sampson®
Five Centennial Drive, Peabody, MA 01960
(978) 532-1900 (800) SAMPSON
www.westonandsampson.com

No.	Date	Description	Dr.By	Ck.By	App.By
A	4.26.16	PRELIMINARY			

REGISTERED PROFESSIONAL ENGINEER
KEVIN M. MICHOLS No. 47273 REGISTERED PROFESSIONAL ENGINEER

TOWN OF HAMILTON, MASSACHUSETTS
DEPARTMENT OF PUBLIC WORKS

BRIDGE STREET CULVERT REPLACEMENT PROJECT

CONSTRUCTION PLAN

DSN.BY	DR.BY	CHK.BY	APP.BY
MK	NAP	LFK	MK

CONTRACT:	JOB NO.	SCALE:	CADD NO.	FILE NO.
NA	2140085	AS NOTED	C-1	212-8

C-1

SHEET 5 OF 12

Z:\MA-Foxboro-Projects\Hamilton MA\Bridge Street Culvert\CADD\Plan Set\Bridge Street Proposed.dwg

GENERAL NOTES:

1. ALL WORK SHALL BE IN ACCORDANCE WITH THE LATEST EDITION OF THE MASSACHUSETTS DEPARTMENT OF TRANSPORTATION (MASSDOT) STANDARD SPECIFICATIONS FOR HIGHWAYS AND BRIDGES AND ALL APPROPRIATE SUPPLEMENTAL SPECIFICATIONS AND SPECIAL PROVISIONS.
2. THE CONTRACTOR SHALL LOCATE AND PROTECT FROM DAMAGE ALL EXISTING UTILITIES. LOCATIONS OF THE EXISTING UTILITIES ARE APPROXIMATE AND SHOWN ONLY AS AN AID TO ASSIST BIDDERS IN DETERMINING THE TYPE OF UTILITIES THAT MAY EXIST. THE CONTRACTOR IS RESPONSIBLE FOR MAKING FIELD INVESTIGATIONS AND OBTAINING INFORMATION FROM UTILITY COMPANIES AND INDIVIDUALS TO PINPOINT THE EXACT LOCATION AND ELEVATION OF ALL SUBSURFACE UTILITIES AND STRUCTURES.
3. ALL DIMENSIONS AND ELEVATIONS OF THE EXISTING STRUCTURE SHOWN ON THESE PLANS ARE TAKEN FROM FIELD OBSERVATIONS AND ARE NOT GUARANTEED. THE CONTRACTOR SHALL DETERMINE AND ESTABLISH ALL DIMENSIONS AND EXISTING DETAILS NECESSARY FOR THE COMPLETION OF ALL WORK BY FIELD MEASUREMENT AND SURVEY. THE CONTRACTOR SHALL BE RESPONSIBLE FOR THE ADEQUACY AND ACCURACY THEREOF, AND SHALL NOT ORDER ANY MATERIAL OR COMMENCE ANY FABRICATION UNTIL HE HAS MADE THE REQUIRED MEASUREMENTS AND EXTENT OF THE PROPOSED WORK HAS BEEN APPROVED BY THE ENGINEER.
4. THE CONTRACTOR SHALL TEMPORARILY SUPPORT, RELOCATE AND PROTECT FROM DAMAGE ALL EXISTING UTILITIES AS REQUIRED.
5. ALL DIMENSIONS SHOWN ON THE PLANS ARE HORIZONTAL.

PRECAST BOX CULVERT:

1. PRECAST CONCRETE BOX CULVERT SHALL BE DESIGNED IN ACCORDANCE WITH THE 2013 EDITION OF THE MASSDOT BRIDGE MANUAL AND THE LATEST EDITION OF THE AASHTO LRFD BRIDGE DESIGN SPECIFICATIONS.
2. PRECAST CONCRETE BOX CULVERT SHALL BE DESIGNED TO SUPPORT THE HL-93 DESIGN TRUCK OR THE DESIGN TANDEM LIVE LOAD, WHICHEVER PRODUCES THE GREATEST EFFECTS.
3. CONCRETE SHALL HAVE A MINIMUM 28-DAY COMPRESSIVE STRENGTH OF 5000PSI AND SHALL HAVE 7% AIR ENTRAINMENT.
4. REINFORCING STEEL BARS SHALL CONFORM TO ASTM A615 GRADE 60. WELDED WIRE FABRIC SHALL CONFORM TO A497. ALL REINFORCING STEEL SHALL BE EPOXY COATED OR GALVANIZED.
5. MINIMUM CLEAR CONCRETE COVER OVER REINFORCING STEEL SHALL BE 1".
6. A 2'-0" WIDE SHEET OF MEMBRANE WATERPROOFING SHALL BE APPLIED AT THE JOINTS OF THE PRECAST CONCRETE CULVERT SECTIONS.
7. TOP AND SIDES OF CULVERT TO RECEIVE BACKFILL SHALL HAVE A BITUMINOUS DAMP-PROOFING APPLIED.
8. BOX CULVERT SHALL CONFORM TO THE REQUIREMENTS OF ASTM C1577

CONCRETE NOTES:

1. CEMENT AND CONCRETE IS DESIGNATED ON THE DRAWINGS BY STRENGTH, COARSE AGGREGATE SIZE, AND CEMENT CONTENT.
2. ALL CAST-IN-PLACE CONCRETE SHALL BE 4000PSI, ¾ INCH, 610 UNLESS NOTED OTHERWISE (U.N.O.)
3. ALL EDGES SHALL HAVE A 1" CHAMFER UNLESS NOTED OTHERWISE (U.N.O)

REINFORCING STEEL

1. REINFORCING STEEL SHALL CONFORM TO THE REQUIREMENTS OF ASTM A615 GRADE 60 AND SHALL BE EPOXY COATED.

FOUNDATION

1. ALL UNSUITABLE MATERIAL SHALL BE REMOVED WITHIN LIMITS OF THE FOUNDATION OF THE STRUCTURE, AS REQUIRED BY THE ENGINEER.
2. FOUNDATIONS MAY BE ALTERED, IF NECESSARY, TO SUIT CONDITIONS ENCOUNTERED DURING CONSTRUCTION, WITH THE APPROVAL OF THE ENGINEER.

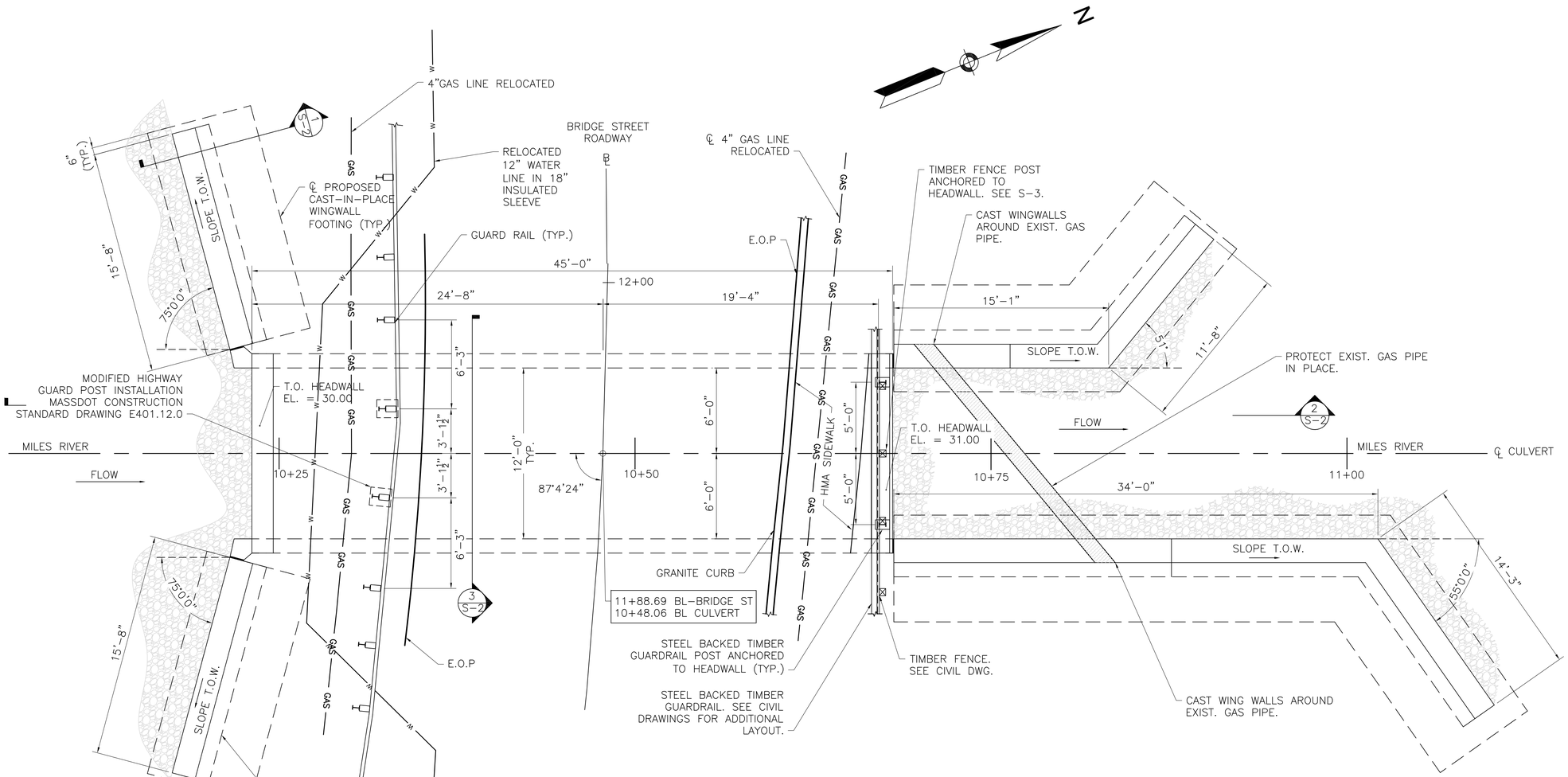

CULVERT - PLAN

SCALE: ¼" = 1'-0"

NOTES:

1. SEE CIVIL DRAWINGS FOR UTILITIES.
2. SEE TYPICAL WINGWALL SECTION FOR WINGWALL DETAILS.
3. SEE CIVIL FOR ROADWAY LAYOUT OVER THE CULVERT.
4. SEE CIVIL FOR EXISTING CONDITIONS. EXISTING CULVERT TO BE REMOVED.
5. SKEW ANGLE IS MEASURED.

COPYRIGHT 2015 WESTON & SAMPSON

Weston&Sampson®
Five Centennial Drive, Peabody, MA 01960
(978) 532-1900 (800) SAMPSON
www.westonandsampson.com

No.	Date	Dr.By	Ck.By	App.By	Description	DATE
A	P	P	R	O	V	E	D	

REGISTERED PROFESSIONAL ENGINEER

COMMONWEALTH OF MASSACHUSETTS
RICHARD A. CAMPBELL
STRUCTURAL
No. 38256
REGISTERED
PROFESSIONAL ENGINEER
4/24/2015

TOWN OF HAMILTON, MASSACHUSETTS
THE DEPARTMENT OF PUBLIC WORKS
BRIDGE STREET CULVERT REPLACEMENT PROJECT

CULVERT STRUCTURAL PLAN

CADD NO.	SCALE:	CONTRACT:	JOB NO.	DR.BY	DSN.BY	CHK.BY	APP.BY
S-1	AS NOTED	NA	2140085	SRB	SRB	MK	RAC

S-1

FILE NO. 212-7

SHEET 6 OF 12

Z:\MA-Foxboro-Projects\Hamilton MA\Bridge Street Culvert\CADort\Design\Structural\SXX_Culvert Design.dwg

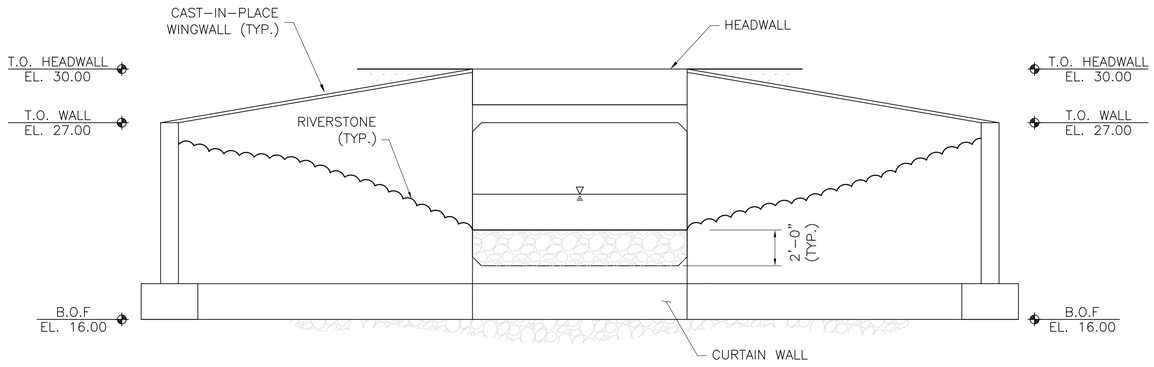

UPSTREAM ELEVATION
SCALE: ¼" = 1'-0"

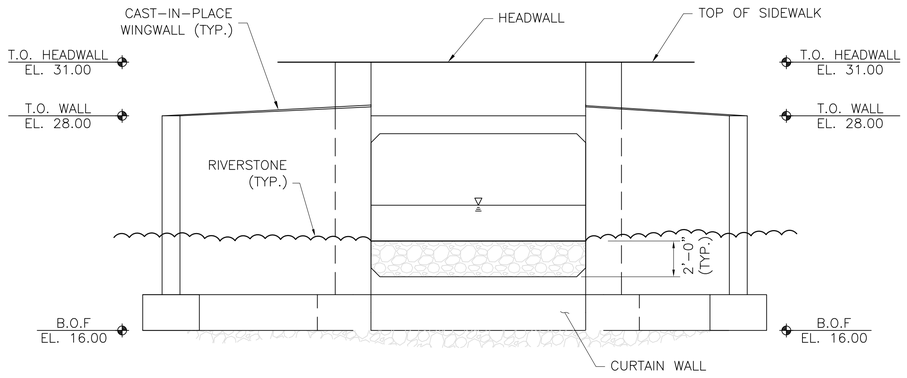

DOWNSTREAM ELEVATION
SCALE: ¼" = 1'-0"

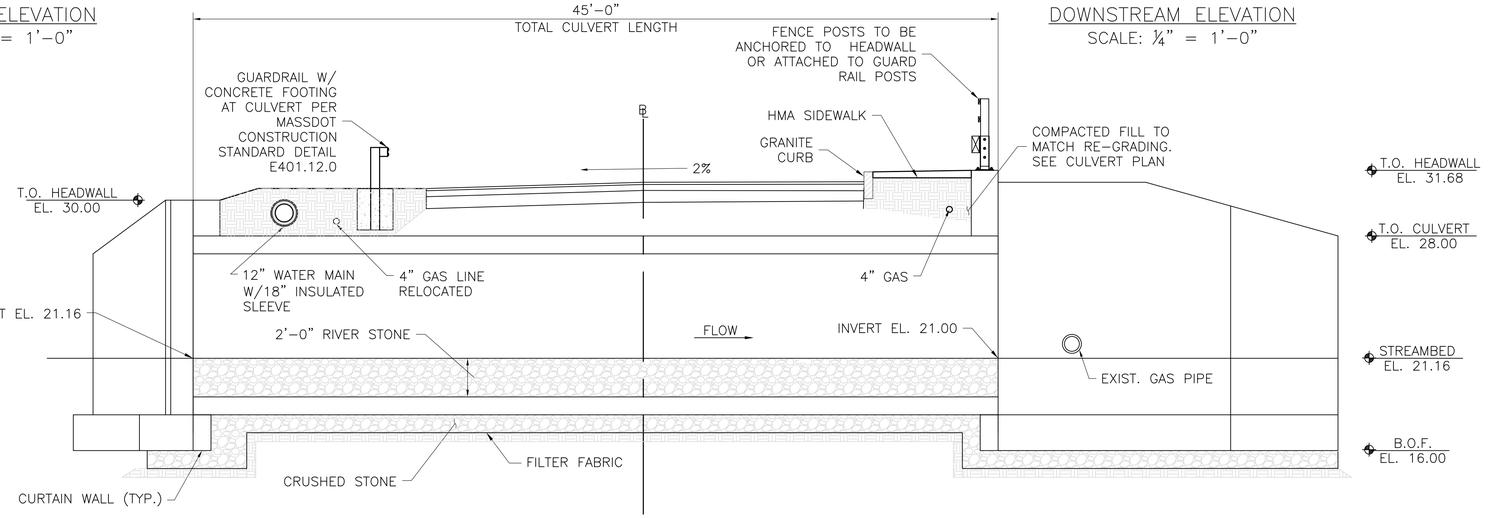

SECTION 2-LONGITUDINAL SECTION
SCALE: ¼" = 1'-0"

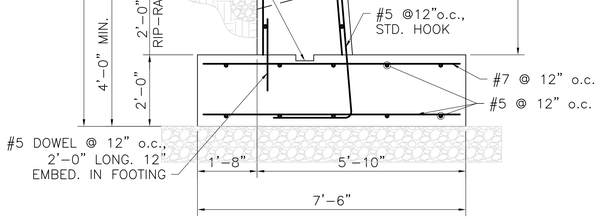

SECTION 1-TYPICAL WINGWALL SECTION
SCALE: ½"=1'-0"

NOTES:

1. ALL CONCRETE SHALL BE 4000 PSI, 3/4", 610 CEMENT CONCRETE.
2. 4"ø WEEP HOLES @ 10'-0" O.C. PROVIDE 1 CUBIC YARD OF CRUSHED STONE WRAPPED IN NON-WOVEN FILTER FABRIC AT EACH END OF WEEP HOLE.
3. CONSTRUCTION JOINT WITH 6"x2" KEY.
4. MEMBRANE WATERPROOFING AND 8"x16"x2", 4000 PSI, ¾", 610 CEMENT CONCRETE BLOCKS LAID IN MORTAR OR OTHER WATERPROOFING PROTECTIVE COURSE, MIN. 2" THICK AS SPECIFIED IN MHD STANDARD SPECS.

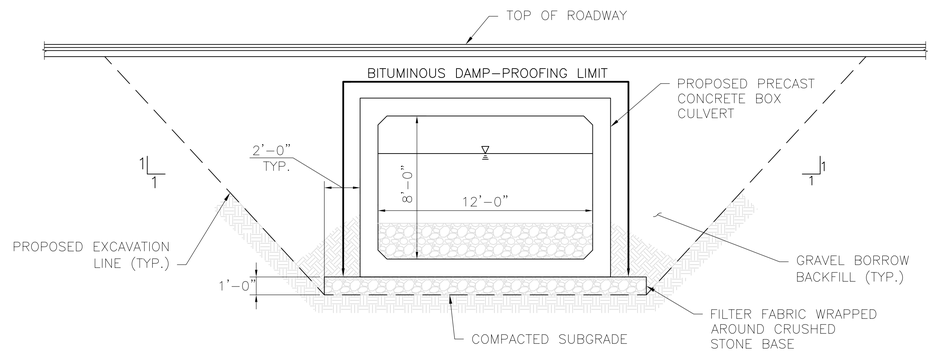

SECTION 3 - TYPICAL CULVERT SECTION
SCALE: ¼" = 1'-0"

COPYRIGHT 2015 WESTON & SAMPSON

Weston&Sampson®
Five Centennial Drive, Peabody, MA 01960
(978) 532-1900 (800) SAMPSON
www.westonandsampson.com

No.	Date	Dr.By	Ck.By	App.By	Description	DATE
A	P	P	R	O	V	E	D

REGISTERED PROFESSIONAL ENGINEER

COMMONWEALTH OF MASSACHUSETTS
RICHARD A. CAMPBELL
STRUCTURAL
No. 38256
REGISTERED PROFESSIONAL ENGINEER
4/24/2015

TOWN OF HAMILTON, MASSACHUSETTS
THE DEPARTMENT OF PUBLIC WORKS
BRIDGE STREET CULVERT REPLACEMENT PROJECT

CULVERT ELEVATIONS AND SECTIONS

SCALE:	CONTRACT:	JOB NO.	DR.BY	DSN.BY	CHK.BY	APP.BY
AS NOTED	NA	2140085	SRB	SRB	MK	RAC

CADD NO. S-2
FILE NO. 212-6

S-2

SHEET 7 OF 12

Z:\MA-Foxboro-Projects\Hamilton MA\Bridge Street Culvert\CADart\Design\Structural\SNX_Culvert Design.dwg

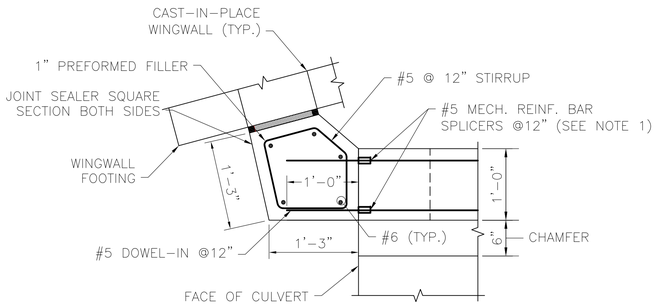

SECTION 1
SCALE: 1" = 1'-0"

NOTES:

1. THE CONTRACTOR MAY SUBSTITUTE #5 DOWELS, 3'-0" LONG, FOR MECHANICAL REINFORCING BAR SPLICERS AND THREADED REBARS.
2. CULVERT REINFORCEMENT IS NOT SHOWN FOR CLARITY.

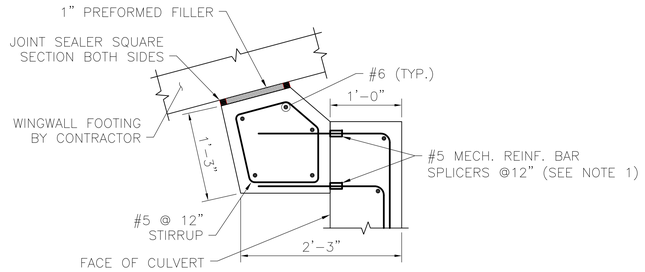

SECTION 2
SCALE: 1" = 1'-0"

NOTES:

1. CULVERT REINFORCEMENT IS NOT SHOWN FOR CLARITY.

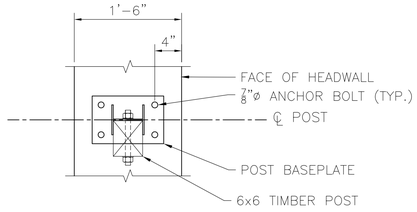

PLAN

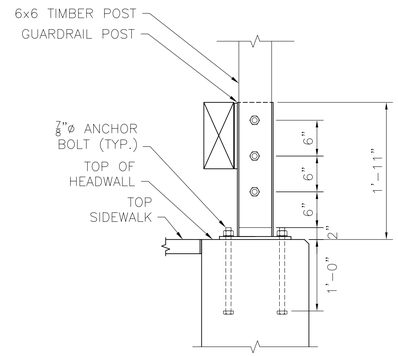

ELEVATION

GUARDRAIL POST TO HEADWALL DETAILS
SCALE: 1" = 1'-0"

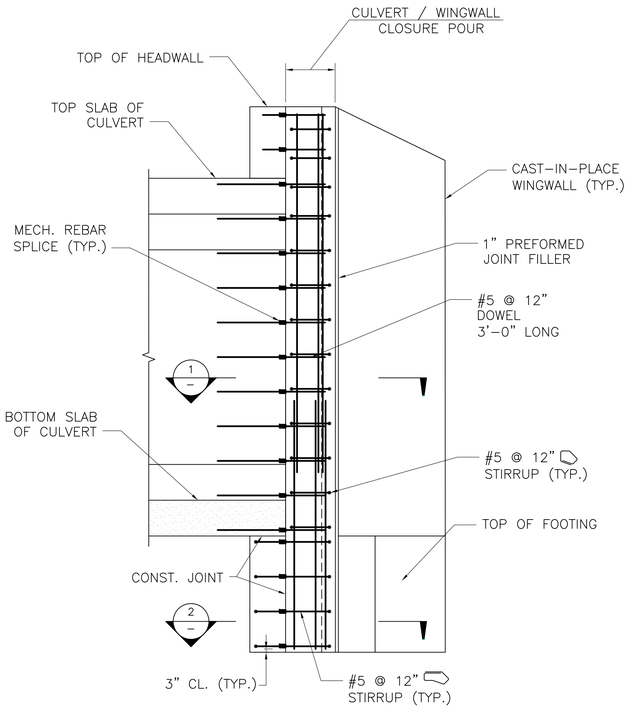

CULVERT JOINT DETAIL SECTION AT WINGWALL
SCALE: ½" = 1'-0"

NOTES:

1. THE CONTRACTOR MAY SUBSTITUTE #5 DOWELS, 3'-0" LONG FOR MECHANICAL REINFORCING BAR SPLICERS AND THREADED REBARS.
2. CULVERT, HEADWALL, AND WINGWALL REINFORCEMENT IS NOT SHOWN FOR CLARITY.

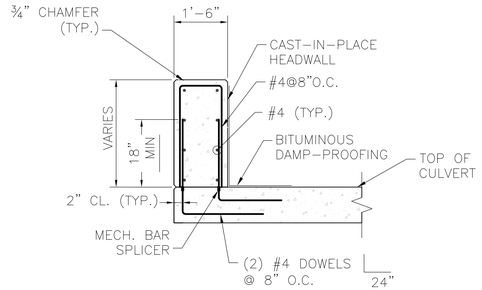

HEADWALL SECTION
SCALE: ½" = 1'-0"

NOTE(S):

1. CULVERT REINFORCEMENT NOT SHOWN FOR CLARITY.

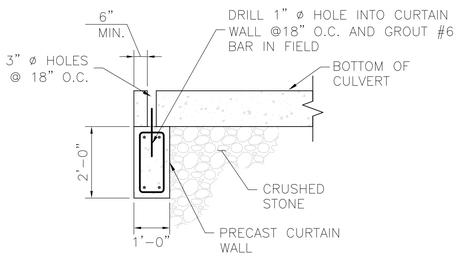

CURTAIN WALL SECTION
SCALE: ½" = 1'-0"

NOTE(S):

1. CULVERT REINFORCEMENT NOT SHOWN FOR CLARITY.

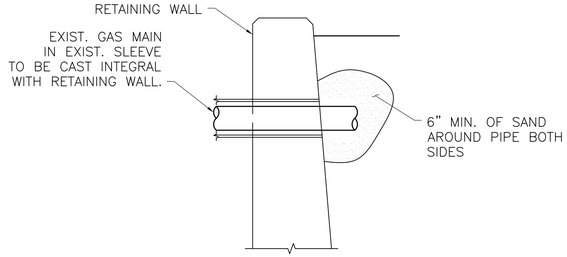

EXISTING GAS MAIN THROUGH RETAINING WALL SECTION
SCALE: ½" = 1'-0"

NOTES:

1. PIPE SHALL NOT PASS UNDER OR THRU WALL FOOTING. LOWER FOOTING BY STEPPING TO AVOID INTERFERENCE.
2. RETAINING WALL REINF. NOT SHOWN FOR CLARITY.

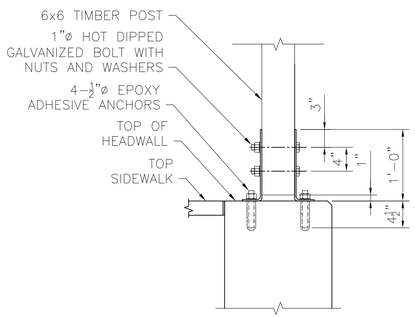

ELEVATION

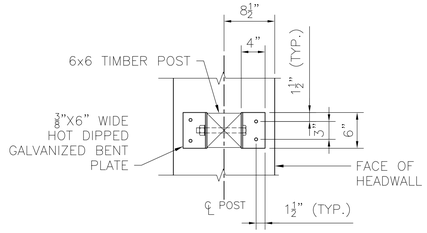

PLAN

WOOD FENCE POST – ANCHOR DETAILS
SCALE: 1" = 1'-0"

COPYRIGHT 2015 WESTON & SAMPSON

Weston&Sampson®
Five Centennial Drive, Peabody, MA 01960
(978) 532-1900 (800) SAMPSON
www.westonandsampson.com

No.	Date	Dr.By	Ck.By	App.By	Description	DATE
A	P	P	R	O	V	E	D

REGISTERED PROFESSIONAL ENGINEER

RICHARD A. CAMPBELL STRUCTURAL No. 38256 REGISTERED PROFESSIONAL ENGINEER
COMMONWEALTH OF MASSACHUSETTS
4/24/2015

TOWN OF HAMILTON, MASSACHUSETTS
THE DEPARTMENT OF PUBLIC WORKS

BRIDGE STREET CULVERT REPLACEMENT PROJECT

CULVERT SECTIONS AND DETAILS

CADD NO.	SCALE:	CONTRACT:	JOB NO.	DR.BY	DSN.BY	CHK.BY	APP.BY
S-3	AS NOTED	NA	21400085	SRB	SRB	MK	RAC

FILE NO. 212-5

S-3

SHEET 8 OF 12

Z:\MA-Foxboro-Projects\Hamilton MA\Bridge Street Culvert\CADD\Design\Structural\SKK_Culvert Design.dwg

EROSION CONTROL NOTES:

IT IS THE INTENT OF THE CONTRACT PLANS AND DETAILS TO CONTROL EROSION AND SEDIMENTATION IN ALL PORTIONS OF THE SITE. THE CONTRACTOR IS ALERTED THAT CONTROL OF EROSION AND SEDIMENTATION IS CONSIDERED TO BE ESPECIALLY IMPORTANT IN AND AROUND THE AREAS SHOWN ON THE PLANS AND DELINEATED AS WETLANDS AND WATERCOURSES. THE CONTRACTOR IS TO IMPLEMENT THE EROSION AND SEDIMENTATION CONTROLS INDICATED ON THE PLANS IN ACCORDANCE WITH THE FOLLOWING NOTES, BUT IS ALERTED TO THE FACT THAT ADDITIONAL MEASURES MAY BE REQUIRED TO COMPLY WITH THIS INTENT, AS FIELD CONDITIONS MAY WARRANT. SHOULD SUCH MEASURES BE DETERMINED TO BE REQUIRED BY THE ENGINEER, THEY ARE TO BE IMPLEMENTED IMMEDIATELY. ANY AND ALL REQUIREMENTS FOR ANY TYPE OF EROSION CONTROL MEASURES SHALL BE INCIDENTAL TO THE PROJECT.

1. ALL WORK SHALL BE IN ACCORDANCE WITH THE CONTRACT DOCUMENTS. THE PROVISIONS OF ALL APPLICABLE PERMITS AND APPROVALS ISSUED BY LOCAL AND STATE REGULATION FOR ACTIVITIES INVOLVING WETLANDS, WATERCOURSES AND/OR EROSION CONTROLS, AND AS REQUIRED BY THE ENGINEER. ALL EROSION AND SEDIMENTATION CONTROL MEASURES SHALL BE CONSTRUCTED IN ACCORDANCE WITH THE MASS DEP'S EROSION AND SEDIMENTATION CONTROL GUIDELINES, AUGUST, 1983 AND THE U.S.D.A. SCS'S EROSION AND SEDIMENT CONTROL IN SITE DEVELOPMENT, MASSACHUSETTS CONSERVATION GUIDE, SEPTEMBER 1983.

2. TEMPORARY EROSION AND SEDIMENTATION CONTROL MEASURES SHALL BE INSTALLED PRIOR TO THE COMMENCEMENT OF ANY SITEWORK, SHALL BE MAINTAINED DURING CONSTRUCTION, AND SHALL REMAIN IN PLACE UNTIL ALL SITEWORK IS COMPLETED AND GROUND COVER IS ESTABLISHED (AT LEAST 75% UNIFORM COVERAGE BY NEW SEEDLINGS).

3. ALL EROSION AND SEDIMENTATION CONTROL MEASURES SHALL BE MAINTAINED IN EFFECTIVE CONDITION THROUGHOUT THE CONSTRUCTION PERIOD. THE CONTRACTOR SHALL INSPECT THE EROSION CONTROLS DAILY AND CLEAN ACCUMULATED MATERIALS FROM BEHIND THEM, AS NECESSARY. ALL EROSION AND SEDIMENTATION CONTROL MEASURES FOUND TO BE IN NEED OF REPAIR OR REPLACEMENT SHALL BE IMMEDIATELY CORRECTED, SO AS TO MAINTAIN THE INTEGRITY OF THE EROSION AND SEDIMENTATION CONTROL SYSTEM.

4. SEDIMENT REMOVED FROM CONTROL STRUCTURES SHALL BE DISPOSED OF IN A MANNER WHICH IS CONSISTENT WITH THE INTENT OF THESE PLANS. NO EQUIPMENT OR MATERIAL OF ANY KIND SHALL BE STOCKPILED OR DEPOSITED IN ANY REGULATED AREA UNLESS SPECIFICALLY SHOWN ON THE CONTRACT PLANS OR AUTHORIZED BY PROJECT PERMITS/APPROVALS.

5. STOCKPILED SOIL SHALL BE SURROUNDED WITH STAKED STRAW BALES AND SILTATION FENCES TO PREVENT AND CONTROL SILTATION AND EROSION. STOCKPILES THAT WILL REMAIN EXPOSED FOR MORE THAN 30 DAYS SHALL BE STABILIZED WITH MULCH OR SEEDED FOR TEMPORARY VEGETATIVE COVER.

6. ALL DISTURBED AREAS THAT WILL REMAIN EXPOSED OR UNDISTURBED FOR A PERIOD OF FOURTEEN (14) DAYS OR LONGER, SHALL BE STABILIZED WITH MULCH OR SEEDED FOR TEMPORARY VEGETATIVE COVER.

7. STRAW BALE BARRIERS, COMPOST FILTER TUBES OR EQUIVALENT BARRIER APPROVED BY THE ENGINEER, SHALL BE PLACED AROUND CATCH BASIN INLETS DURING CONSTRUCTION AND SHALL BE MAINTAINED UNTIL CONTRIBUTING AREAS ARE PAVED. SILT FENCE BARRIERS, OR EQUIVALENT BARRIER APPROVED BY THE ENGINEER SHALL BE PLACED BETWEEN FRAMES AND GRATES TO PREVENT ANY TYPE OF SILT RUN-OFF INTO ANY EXISTING OR NEW CATCH BASINS.

8. THE CONTRACTOR SHALL INSPECT ALL PORTIONS OF THE SITE IN ANTICIPATION OF RAINFALL EVENTS TO DETERMINE IF SITE GRADING IS SUFFICIENT TO PREVENT EROSION OF SLOPES OR WATERCOURSES WITHIN THE PROJECT LIMITS. SHOULD ADDITIONAL MEASURES BE REQUIRED, THEY ARE TO BE IMPLEMENTED IMMEDIATELY. IN NO CASE SHALL THE INSTALLATION OF ADDITIONAL MEASURES NECESSARY TO PROTECT SLOPES WITHIN THE PROJECT LIMITS BE DELAYED BEYOND THE COMMENCEMENT OF PRECIPITATION.

9. ALL DISTURBED EARTH SLOPES SHALL BE STABILIZED WITH PERMANENT VEGETATIVE COVER AS SOON AS POSSIBLE. DISTURBED AREAS THAT ARE NOT SUBJECT TO CONSTRUCTION TRAFFIC SHALL RECEIVE A PERMANENT OR TEMPORARY VEGETATIVE COVER AS SOON AS FINAL CONTOURS ARE ESTABLISHED. IF THE SEASON PREVENTS THE ESTABLISHMENT OF A VEGETATIVE COVER, DISTURBED AREAS SHALL BE THOROUGHLY MULCHED. MULCHED AREAS SHALL BE SEEDED AS SOON AS WEATHER CONDITIONS ALLOW.

10. A STOCKPILE OF ADDITIONAL COMPOST TUBES, SILTATION FENCE AND CRUSHED STONE SHALL BE KEPT ON SITE THROUGHOUT THE CONSTRUCTION WORK. THIS MATERIAL SHALL BE INSTALLED AS REQUIRED BY THE ENGINEER TO MITIGATE ANY EROSION/SEDIMENTATION CONDITIONS WHICH MAY ARISE.

11. FOR DESCRIPTION, MATERIALS, AND CONSTRUCTION METHOD, SEE SPECIAL PROVISIONS. FOR LOCATION OF PROPOSED EROSION CONTROL MEASURES, SEE PLANS. AREAS DISTURBED BY EROSION BARRIERS SHALL BE LOAMED AND SEEDED, OR OTHERWISE RESTORED TO ORIGINAL CONDITION.

12. THE CONTRACTOR SHALL REMOVE ALL SEDIMENTATION CONTROL SYSTEMS, REMOVE ALL ACCUMULATED SEDIMENTS, AND SEED THE DISTURBED AREAS WHEN THE CONTROL SYSTEMS ARE NO LONGER REQUIRED. THE CONTRACTOR SHALL REQUEST AND RECEIVE PERMISSION FROM THE ENGINEER PRIOR TO REMOVING ANY CONTROL SYSTEM.

13. ALL WORK ASSOCIATED WITH TEMPORARY EROSION CONTROL MEASURES AND ACTIVITIES NOT INCLUDED UNDER A SPECIFIC PAY ITEM SHALL BE CONSIDERED INCIDENTAL TO THE PROJECT.

DEWATERING DISCHARGE DISPOSAL DETAIL

NOT TO SCALE

DEWATERING NOTES:

1. DEWATERING POOL LOCATION SHALL BE AT LEAST 100 FT OR AS FAR AWAY AS POSSIBLE FROM RESOURCE AREA AS REQUIRED BY THE ENGINEER.
2. ALL EROSION CONTROL DEVICES, INCLUDING DEWATERING POOL SHALL BE IN PLACE PRIOR TO COMMENCEMENT OF ANY DEWATERING ACTIVITIES.
3. DEWATERING POOL SHALL BE MAINTAINED AND CLEANED ON A REGULAR BASIS. SEDIMENTS REMOVED FROM POOL SHALL BE DISPOSED ACCORDING TO DEP GUIDELINES AND ORDER OF CONDITIONS.
4. ANY DEWATERING OPERATIONS DEEMED NECESSARY BY THE CONTRACTOR OR REQUIRED BY THE ENGINEER SHALL BE INCIDENTAL TO THE PROJECT.
5. DEWATERING DISCHARGE AFTER TREATMENT SHALL BE LESS THAN 25 NEPHELOMETRIC TURBIDITY UNITS (NTU).

SLOPE CHECK

WHEN JOINING TWO OR MORE SILTATION FENCES TIE THE TWO END POSTS TOGETHER WITH NYLON CORD.

DITCH CHECK

SILTATION FENCE DETAIL

NOT TO SCALE

PLAN VIEW

GENERAL NOTES:

1. PROVIDE A MINIMUM TUBE DIAMETER OF 12 INCHES FOR SLOPES UP TO 50 FEET IN LENGTH WITH A SLOPE RATIO OF 3H:1V OR STEEPER. LONGER SLOPES OF 3H:1V MAY REQUIRE LARGER TUBE DIAMETER OR ADDITIONAL COURSING OF FILTER TUBES TO CREATE A FILTER BERM. REFER TO MANUFACTURER'S RECOMMENDATIONS FOR SITUATIONS WITH LONGER OR STEEPER SLOPES.
2. INSTALL TUBES ALONG CONTOURS AND PERPENDICULAR TO SHEET OR CONCENTRATED FLOW.
3. DO NOT INSTALL IN PERENNIAL, EPHEMERAL OR INTERMITTENT STREAMS.
4. CONFIGURE TUBES AROUND EXISTING SITE FEATURES TO MINIMIZE SITE DISTURBANCE AND MAXIMIZE CAPTURE AREA OF STORMWATER RUN-OFF.

PLACING TUBES AGAINST THE UPHILL SIDE OF WELL- ANCHORED, STATIONARY FEATURES SUCH AS EXISTING TREES CAN PROVIDE ADDITIONAL BRACING.

CURVE ENDS UPHILL TO PREVENT DIVERSION OF UNFILTERED RUN-OFF.

2 IN. DEEP x 12 IN. WIDE LAYER OF LOOSE COMPOST MATERIAL PLACED ON UPHILL/FLOW SIDE OF TUBES TO FILL SPACE BETWEEN SOIL SURFACE AND TUBES.

COMPOST FILTER TUBE
MINIMUM 12 INCHES IN DIAMETER WITH AN EFFECTIVE HEIGHT OF 9.5 INCHES. TUBES FOR COMPOST FILTERS SHALL BE JUTE MESH OR APPROVED BIODEGRADABLE MATERIAL. ADDITIONAL TUBES SHALL BE USED AS REQUIRED BY THE ENGINEER.

TAMP TUBES IN PLACE TO ENSURE GOOD CONTACT WITH SOIL SURFACE. IT IS NOT NECESSARY TO TRENCH TUBES INTO EXISTING GRADE.

2 INCH X 2 INCH X 3 FEET
UNTREATED HARDWOOD STAKES, UP TO 5 FT. APART OR AS REQUIRED TO SECURE TUBES IN PLACE.

WHEN STAKING IS NOT POSSIBLE, SUCH AS WHEN TUBES MUST BE PLACED ON PAVEMENT, HEAVY CONCRETE OR CINDER BLOCKS CAN BE USED BEHIND TUBES UP TO 5 FT. APART OR AS REQUIRED TO SECURE TUBES IN PLACE.

SINGLE COMPOST FILTER TUBE DETAIL

NOT TO SCALE

PROVIDE A 3 FT. MINIMUM OVERLAP AT ENDS OF TUBES TO JOIN IN A CONTINUOUS BARRIER AND MINIMIZE UNIMPEDED FLOW.
STAKE JOINING TUBES SNUGLY AGAINST EACH OTHER TO PREVENT UNFILTERED FLOW BETWEEN THEM.

SECURE ENDS OF TUBES WITH STAKES SPACED 18 IN. APART THROUGH TOPS OF TUBES.

PLAN VIEW – JOINING DETAIL

COPYRIGHT 2015 WESTON & SAMPSON

Weston&Sampson®
Five Centennial Drive, Peabody, MA 01960
(978) 532-1900 (800) SAMPSON
www.westonandsampson.com

No.	Date	Dr.By	Ck.By	App.By	Description
		A	P	P	R O V E D

REGISTERED PROFESSIONAL ENGINEER — 4.26.16 DATE

TOWN OF HAMILTON, MASSACHUSETTS
DEPARTMENT OF PUBLIC WORKS

BRIDGE STREET CULVERT REPLACEMENT PROJECT

CONSTRUCTION DETAILS

CADD NO.	SCALE:	CONTRACT:	JOB NO.	DR.BY	DSN.BY	CHK.BY	APP.BY
CD-1	AS NOTED	NA	2140085	NAP	MK	LFK	MK

CD-1

FILE NO. 212-4

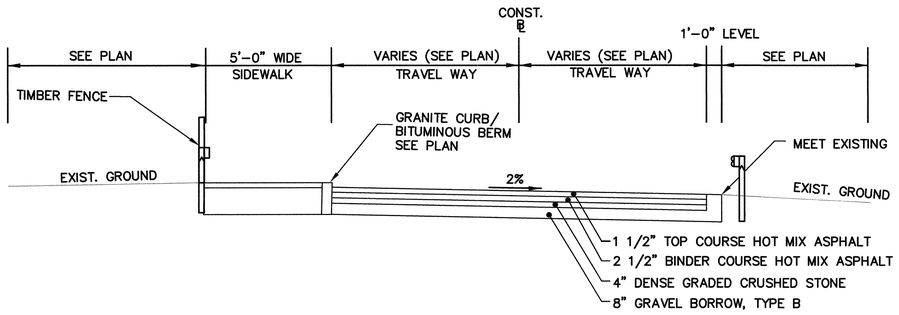

ROADWAY PAVEMENT–TYPICAL SECTION

SCALE: NOT TO SCALE

PAVEMENT NOTES:
ROADWAY PAVEMENT

SURFACE COURSE: 1½" HOT MIX ASPHALT TOP COURSE MATERIAL, PLACED IN ONE LAYER.
BINDER COURSE: 2½" HOT MIX ASHPALT BINDER COURSE MATERIAL, PLACED IN ONE LAYER.
FOUNDATION: 4" DENSE GRADED CRUSHED STONE OVER 8" GRAVEL BORROW, TYPE B.

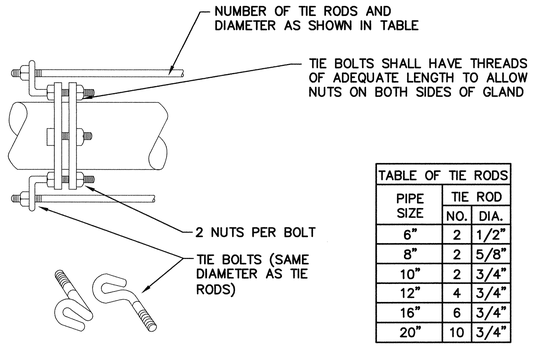

TABLE OF TIE RODS		
PIPE SIZE	TIE ROD NO.	TIE ROD DIA.
6"	2	1/2"
8"	2	5/8"
10"	2	3/4"
12"	4	3/4"
16"	6	3/4"
20"	10	3/4"

JOINT RESTRAINT DETAIL

NOT TO SCALE

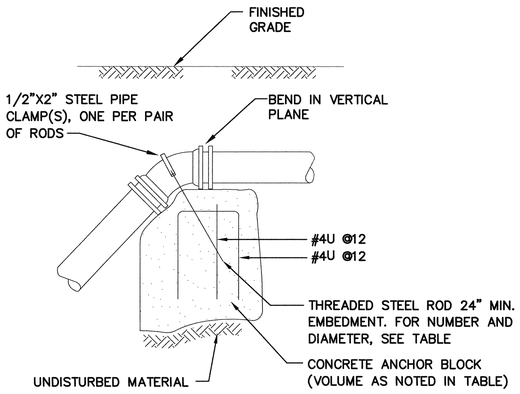

Table Of Dimensions For Anchor Blocks		NO. AND SIZE OF THREADED RODS	
BEND SIZE	Volume	NO.	DIAM.
6"–22.5°	0.6 C.Y.	2	1/2"
6"–45°	1.0 C.Y.	2	1/2"
8"–22.5°	1.0 C.Y.	2	1/2"
8"–45°	1.8 C.Y.	2	3/4"
12"–22.5°	2.5 C.Y.	2	3/4"
12" 45°	4.0 C.Y.	4	3/4"

ANCHOR BLOCK DETAIL

NOT TO SCALE

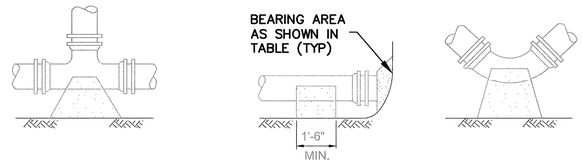

TABLE OF CONCRETE THRUST RESTRAINT MINIMUM BEARING AREAS IN SQUARE FEET AGAINST UNDISTURBED MATERIAL FOR WATER MAIN FITTINGS				
SIZE OF MAIN	90° BENDS, TEES, CAPS AND PLUGS	45° BENDS AND WYES	22–1/2° BENDS	11–1/4° BENDS
6", 8"	5	4	2	2
10", 12"	12	9	5	2
16"	20	15	8	4
20"	36	24	13	7

NOTES:
1. ALL WATER MAIN FITTINGS SHALL HAVE CONCRETE BACKING FOR THRUST RESTRAINT UNLESS OTHERWISE SPECIFIED.
2. CONTRACTOR SHALL USE CARE TO AVOID PLACEMENT OF CONCRETE ON THE FITTING JOINTS

CONCRETE THRUST RESTRAINT FOR FITTINGS

NOT TO SCALE

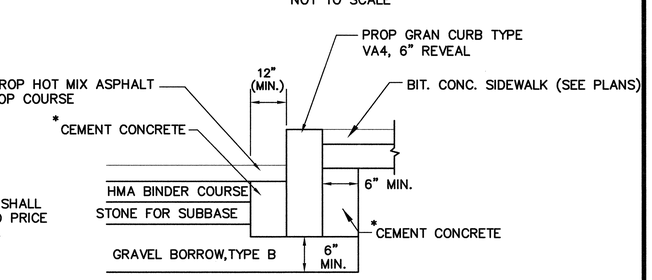

*CEMENT CONCRETE SHALL BE INCLUDED IN BID PRICE FOR GRANITE CURB.

CURB INSTALLATION IN FULL DEPTH RECONSTRUCTION OR RECLAMATION

NOT TO SCALE

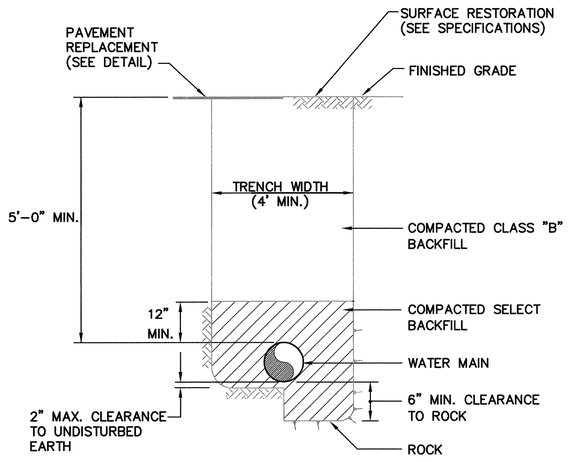

WATER MAIN TRENCH DETAIL

NOT TO SCALE

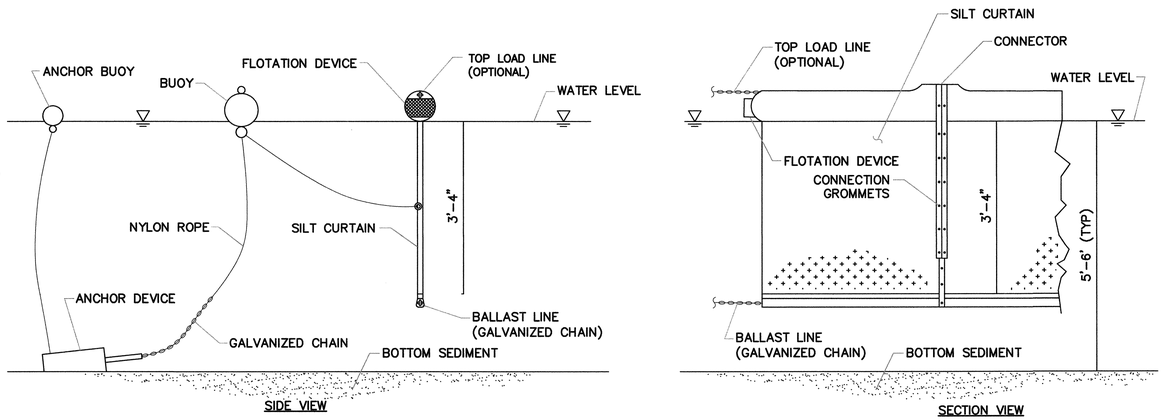

SILT CURTAIN DETAIL

NOT TO SCALE

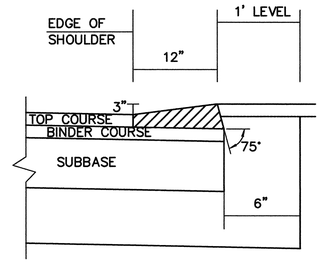

BITUMINOUS CONCRETE BERM

NOT TO SCALE

COPYRIGHT 2015 WESTON & SAMPSON

Weston&Sampson®
Five Centennial Drive, Peabody, MA 01960
(978) 532-1900 (800) SAMPSON
www.westonandsampson.com

No.	Date	Description	Dr.By	Ck.By	App.By
		APPROVED			

4-26-16
DATE

REGISTERED PROFESSIONAL ENGINEER

COMMONWEALTH OF MASSACHUSETTS MICHAEL P. NICHOLS CIVIL No. 47723 REGISTERED PROFESSIONAL ENGINEER

TOWN OF HAMILTON, MASSACHUSETTS
DEPARTMENT OF PUBLIC WORKS
BRIDGE STREET CULVERT REPLACEMENT PROJECT

CONSTRUCTION DETAILS

DR.BY	DSN.BY	CHK.BY	APP.BY
NAP	MK	LFK	MK

JOB NO. 2140085
CONTRACT: NA
SCALE: AS NOTED
CADD NO. CD-2

CD-2

FILE NO. 212-3

SHEET 10 OF 12

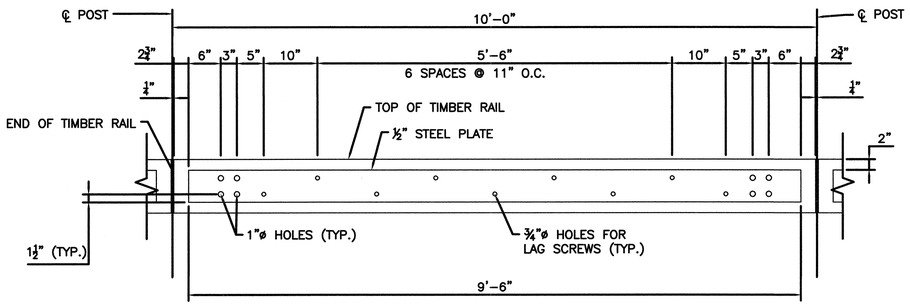

STEEL RAIL

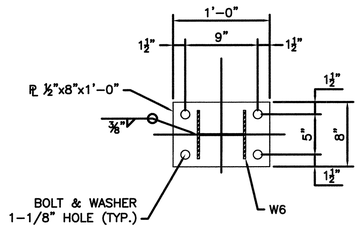

TYPICAL STEEL BASE PLATE
NOT TO SCALE

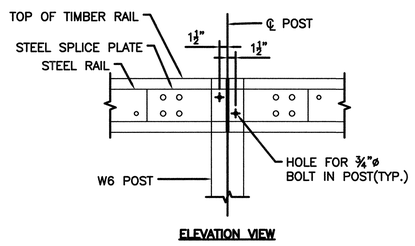

POST CONNECTION

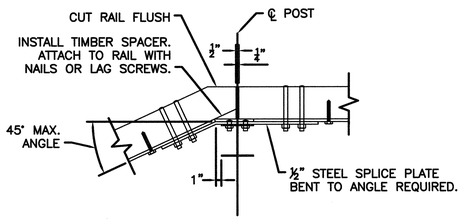

NOTES:

1. CONTRACTOR SHALL SUBMIT SHOP DRAWINGS SHOWING FULLY DIMENSIONED LAYOUT OF GUARDRAIL FOR REVIEW AND APPROVAL PRIOR TO FABRICATION OF GUARDRAIL COMPONENTS.
2. STEEL BACKED TIMBER RAIL BOLT HOLE LOCATIONS AND SPACING SHALL BE ADJUSTED AS REQUIRED FOR INSTALLATION OF ANGLED SECTIONS.
3. SURFACES OF PRESSURE TREATED TIMBER CUT IN THE FIELD SHALL BE COATED WITH AN APPROVED PRESERVATIVE.

POST WITH ANGLED RAIL PLAN VIEW
NOT TO SCALE

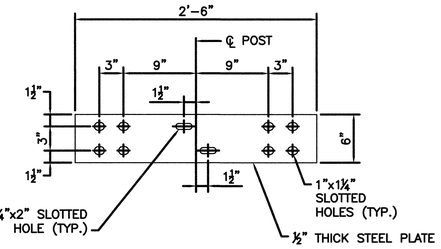

STEEL SPLICE PLATE
NOT TO SCALE

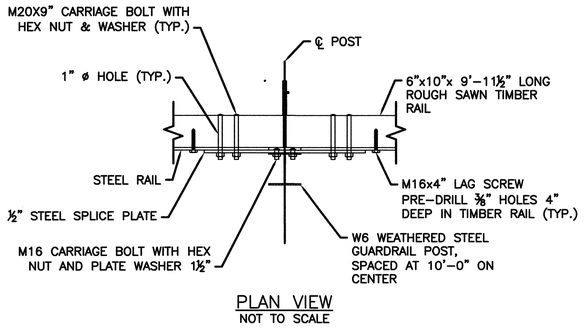

PLAN VIEW
NOT TO SCALE

STEEL BACKED TIMBER GUARDRAIL WITH STEEL POSTS DETAILS

NOT TO SCALE

NOTES:

1. ALL CONNECTION HARDWARE SHALL BE GALVANIZED ACCORDING TO ASTM A123.
2. SEE SPECIAL PROVISIONS FOR SPECIFIC REQUIREMENTS.

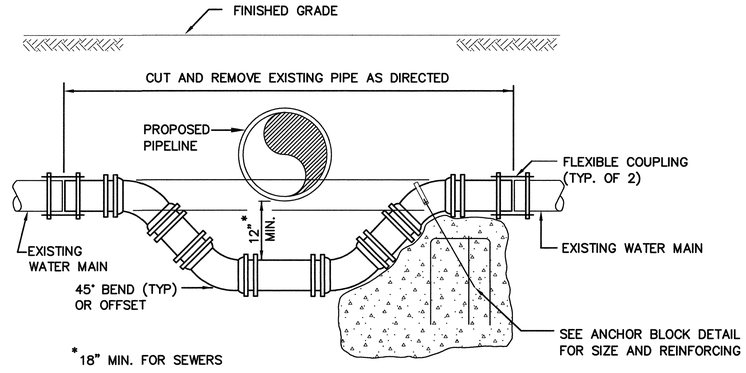

EXISTING WATER MAIN RELOCATION DETAIL

N.T.S.

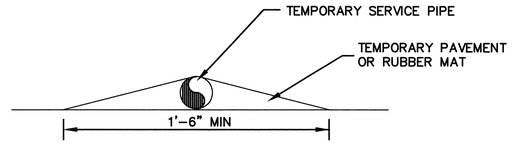

2" TEMPORARY SERVICE PIPE DRIVEWAY CROSSING DETAIL

N.T.S.

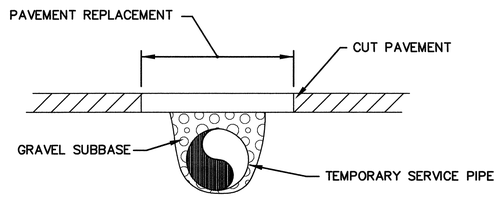

TEMPORARY SERVICE PIPE ROADWAY CROSSING DETAIL

N.T.S.

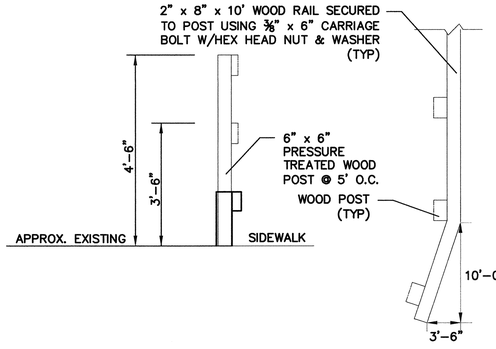

SECTION VIEW PLAN VIEW

NOTES:

1. WOOD POSTS SHALL BE ATTACHED TO THE GUARDRAIL AS SHOWN ON THE STRICTURAL DETAILS.
2. WASHERS SHALL BE 1" DIA. CUT STEEL, GALVANIZED.
3. BURIED SECTIONS OF POSTS TO BE BURIED SHALL BE TREATED WITH A WOOD PRESERVATIVE AS APPROVED BY THE ENGINEER.
4. WOOD DIMENSIONS ARE NOMINAL TO MATCH COMMON INDUSTRY SIZES.

TIMBER RAIL FENCE DETAIL

N.T.S.

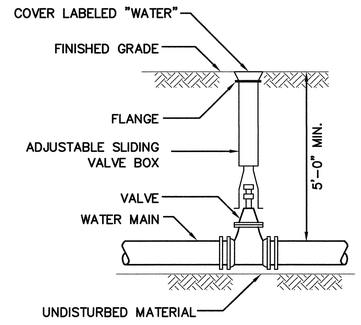

VALVE AND BOX DETAIL

N.T.S.

COPYRIGHT 2015 WESTON & SAMPSON

Weston&Sampson®
Five Centennial Drive, Peabody, MA 01960
(978) 532-1900 (800) SAMPSON
www.westonandsampson.com

No.	Date	Description	Dr.By	Ck.By	App.By
		APPROVED			

4-26-16 DATE

REGISTERED PROFESSIONAL ENGINEER

COMMONWEALTH OF MASSACHUSETTS KEVIN L. MCNULTY CIVIL No. 47279 REGISTERED PROFESSIONAL ENGINEER

TOWN OF HAMILTON, MASSACHUSETTS
DEPARTMENT OF PUBLIC WORKS
BRIDGE STREET CULVERT REPLACEMENT PROJECT

CONSTRUCTION DETAILS

DR.BY	DSN.BY	CHK.BY	APP.BY
NAP	MK	LFK	MK

JOB NO. 2140085
CONTRACT: NA
SCALE: AS NOTED
CADD NO. CD-3

CD-3

FILE NO. 212-2

SHEET 11 OF 12

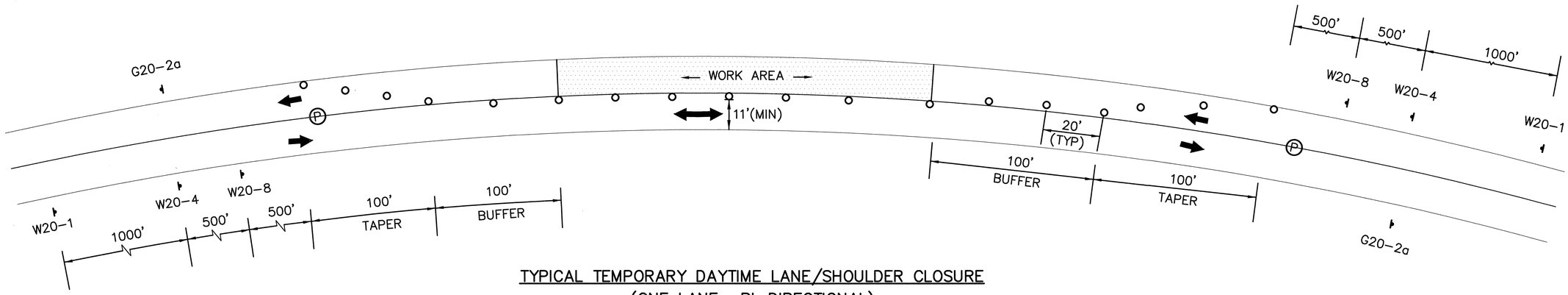

TYPICAL TEMPORARY DAYTIME LANE/SHOULDER CLOSURE
(ONE LANE– BI–DIRECTIONAL)

N.T.S.

NOTES:

1. PLACEMENT OF ALL CONSTRUCTION SIGNS, DRUMS, BARRICADES, TRAFFIC DEVICES AND THE SHAPE, SIZE & COLOR OF ALL TEMPORARY TRAFFIC SIGNS SHALL CONFORM WITH THE 2003 MANUAL ON UNIFORM TRAFFIC CONTROL DEVICES (MUTCD) AND REVISIONS.
2. ADVANCE WARNING SIGN PLACEMENT AND TAPER LENGTH SHALL BE ADJUSTED ACCORDING TO STREET CONDITIONS AND DRIVEWAY OPENINGS.
3. ALL DRUMS SHALL BE APPROXIMATELY PLACED AND RELOCATED AS NECESSARY TO MAINTAIN ADEQUATE ABUTTER ACCESS AT ALL TIMES.
4. THE CONTRACTOR SHALL NOTIFY EACH ABUTTER AT LEAST 24 HOURS IN ADVANCE OF THE START OF ANY WORK THAT WILL REQUIRE THE TEMPORARY CLOSURE OF ACCESS, SUCH AS EXISTING PAVEMENT EXCAVATION, TEMPORARY DRIVEWAY PAVEMENT PLACEMENT AND SIMILAR OPERATIONS.
5. NONESSENTIAL TRAFFIC CONTROL DEVICES SHALL BE COVERED OR REMOVED DURING NON–WORKING HOURS.
6. PEDESTRIANS SHALL BE PROVIDED WITH ACCESS AND SAFE PASSAGE THROUGH THE TEMPORARY TRAFFIC CONTROL ZONE AT ALL TIMES.
7. ADVISORY SPEED PLATES (W13–1 AND POLICE OFFICER (W20–8) R2–6A & R2–6B) SHALL BE USED IF APPLICABLE AND AS REQUIRED BY THE ENGINEER.
8. R2–10 SIGN TO BE ERECTED BETWEEN THE FIRST AND SECOND ADVANCED CONSTRUCTION WARNING SIGNS.
9. MAINTAIN ONE LANE FOR TWO WAY TRAFFIC (MIN. 11' WIDTH) AT ALL TIMES DURING CONSTRUCTION.

LEGEND

- REFLECTORIZED CHANNELIZING DEVICE
- REFLECTORIZED DRUM WITH LIGHT
- TRAFFIC FLOW DURING CONSTRUCTION
- NORMAL TRAFFIC FLOW
- POLICE DETAIL OFFICER
- PORTABLE BREAKAWAY BARRICADE TYPE III
- CONSTRUCTION SIGN
- WORK AREA
- N.T.S. NOT TO SCALE
- ARROW BOARD

TEMPORARY TRAFFIC SIGN SUMMARY

IDENTIFICATION NUMBER	SIZE OF SIGN WIDTH	SIZE OF SIGN HEIGHT	TEXT
G20–2a	48"	24"	END ROAD WORK
R2–6A	48"	36"	IT'S NOW THE LAW / SPEEDING FINES DOUBLED IN WORK ZONES
R2–6B	36"	36"	SPEEDING FINES DOUBLED IN WORK ZONES
W13–1	18"	18"	20 M.P.H.
W20–1	48"	48"	ROAD WORK AHEAD
W20–1	48"	48"	ROAD WORK 1000 FT
W20–4	48"	48"	ONE LANE ROAD 1000 FT
W20–8	48"	48"	POLICE OFFICER AHEAD

COPYRIGHT 2015 WESTON & SAMPSON

Weston&Sampson®
Five Centennial Drive, Peabody, MA 01960
(978) 532-1900 (800) SAMPSON
www.westonandsampson.com

No.	Date	Dr.By	Ck.By	App.By	Description
		A	P	P	R O V E D

4-26-16
DATE

REGISTERED PROFESSIONAL ENGINEER

TOWN OF HAMILTON, MASSACHUSETTS
DEPARTMENT OF PUBLIC WORKS
BRIDGE STREET CULVERT REPLACEMENT PROJECT

CONSTRUCTION ZONE SAFETY PLAN

CADD NO.	SCALE:	CONTRACT:	JOB NO.	DR.BY	DSN.BY	CHK.BY	APP.BY
CD-4	AS NOTED	NA	2140085	NAP	MK	LFK	MK

CD-4

FILE NO. 212-1